HF TRANSCEIVER / ALL MODE MULTI BANDER

TS-450S/690S

SERVICE MANUAL

KENWOOD

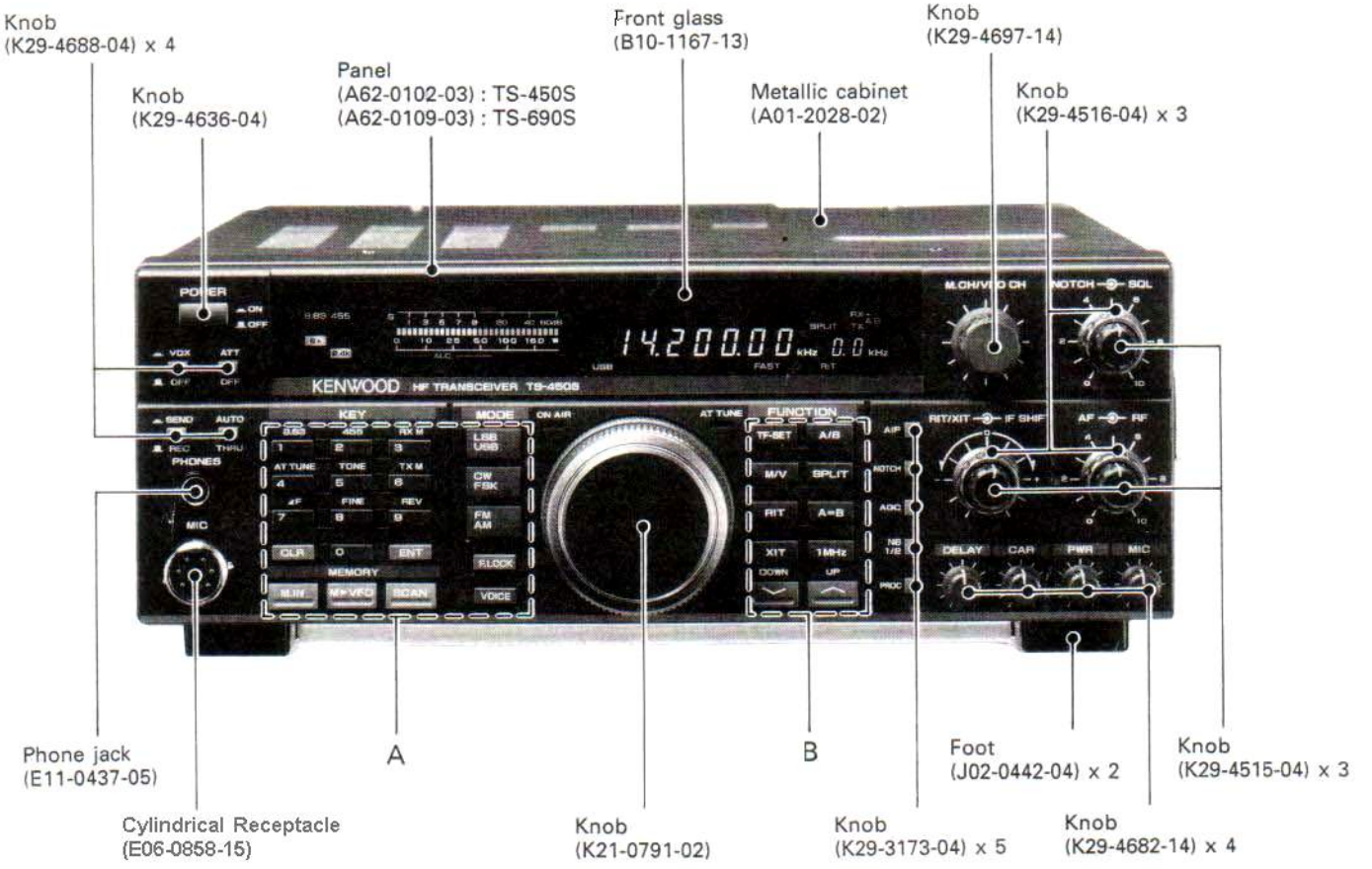

A

Knob (K29-4611-03)	Knob (K29-4612-03)	Knob (K29-4613-03)	Knob (K29-4633-03)
Knob (K29-4614-03)	Knob (K29-4615-03)	Knob (K29-4616-03)	Knob (K29-4634-03)
Knob (K29-4617-03)	Knob (K29-4618-03)	Knob (K29-4619-03)	Knob (K29-4635-03)
Knob (K29-4621-03)	Knob (K29-4620-03)	Knob (K29-4622-03)	Knob (K29-4630-03)
Knob (K29-4505-04)	Knob K29-4506-04)	Knob (K29-4507-04)	Knob (K29-4626-03)

B

Knob (K29-4689-03)	Knob (K29-4693-03)
Knob (K29-4690-03)	Knob (K29-4694-03)
Knob (K29-4691-03)	Knob (K29-4695-03)
Knob (K29-4692-03)	Knob (K29-4696-03)
Knob (K29-4508-04)	Knob (K29-4509-04)

Photo is TS-450S.

CONTENTS

CIRCUIT DESCRIPTION

Overview

The TS-450S/690S series consists of the following models:

- TS-450S with AT (For HF)
- TS-450S without AT (For HF)
- TS-690S without AT (For HF plus 50-MHz band) (An optional AT can be built in.)

The receive frequency range is 100kHz to 40MHz for the TS-450S, and 100kHz to 60MHz for the TS-690S. (For the performance guarantee range, see the ratings.)

The local oscillator system uses a DDS (direct digital synthesizer) with a 1Hz resolution and the stability of single-crystal frequency management.

1) Features

- Primary operation mode in which the minimum panel functions necessary for transmission are available
- High receive performance by triple conversion
- Optional filters (8.83MHz x 2, 455kHz x 1)
- High receive sensitivity in the 28 and 50MHz bands (AIP off)
- High intercept point in the 28MHz and 50MHz bands (AIP on)
- Switches, such as AIP and AGC, are controlled by the microcomputer, and can be memorized.
- NB2 is built in.
- The DSP-100 and AT-300 can be connected.

Units for Each Model and Destination

Parts No.	Unit name	TS-690S						TS-450S						
		K	X	P	E	E2	M	K	X	P	E	E2	M	M2
		011	071	101	271	272	021	011	071	101	271	272	021	022
X41-3170-00	Switch unit	1	1	1	1	1	1	1	1	1	1	1	1	1
X44-3130-00	RF unit	1	1	1	1	1	1							
X44-3130-01								1	1	1	1	1	1	1
X45-3400-00	Final unit (HF 100W)	1	1	1	1	1	1							
X45-3400-01								1	1	1	1	1	1	1
X45-3420-00	Final unit (50MHz 10W)	1	1	1	1	1	1							
X45-3430-00	Final unit (50MHz 50W)	1	1	1	1	1	1							
X46-3120-11	Digital unit	1		1										
X46-3120-12								1		1				
X46-3120-21			1				1							
X46-3120-22									1				1	
X46-3120-23														1
X46-3122-71					1									
X46-3122-72											1			
X46-3122-73						1								
X46-3122-74												1		
X48-3090-00	IF unit	1	1	1	1	1	1							
X48-3090-01								1	1	1	1	1	1	1
X50-3150-00	PLL unit	1	1	1	1	1	1							
X50-3150-01								1	1	1	1	1	1	1
X50-3160-00	CAR unit	1	1	1	1	1	1	1	1	1	1	1	1	1
X51-3110-00	Filter unit	1	1	1	1	1								
X51-3110-01								1	1	1	1	1		
X51-3110-21							1							
X51-3110-22													1	1
X53-3370-00*	AT unit							1	1	1	1	1	1	1

* Models with and without AT.

CIRCUIT DESCRIPTION

List of Destinations

Model	Destination	Destination code	Remarks
TS-690S	North America	K	50MHz, 100W without AT
TS-690S	Australia	X	50MHz, 100W without AT
TS-690S	Canada	P	50MHz, 100W without AT
TS-690S	Europe	E	50MHz, 100W without AT
TS-690S	Belgium	E2	50MHz, 100W without AT
TS-690S	Other countries	M	50MHz, 100W without AT
TS-450S	North America	K	100W without AT
TS-450S	Australia	X	100W without AT
TS-450S	Canada	P	100W without AT
TS-450S	Europe	E	100W without AT
TS-450S	Belgium	E2	100W without AT
TS-450S	Other countries	M	100W without AT
TS-450S	Other countries	M2	100W without AT
TS-450S	North America	K	100W with AT
TS-450S	Australia	X	100W with AT
TS-450S	Canada	P	100W with AT
TS-450S	Europe	E	100W with AT
TS-450S	Belgium	E2	100W with AT
TS-450S	Other countries	M	100W with AT
TS-450S	Other countries	M2	100W with AT

Accessories

Parts name	Part No.	K	M	M2	E	E2	X	P
Instruction manual	B62-0095-00	1					1	
Instruction manual	B62-0096-00		1	1	1	1		1
Instruction manual	B62-0097-00				1	1		
External control command description	B62-0099-00	1	1	1	1	1	1	1
Warranty card	B46-0419-00				1	1		
Warranty card	B46-0410-30	1						
Warranty card	B46-0422-00							1
7-pin DIN plug	E07-0751-05	1	1	1	1	1	1	1
13-pin round plug	E07-1351-05	1	1	1	1	1	1	1
Microphone	T91-0352-15	1	1	1	1	1	1	1
Marker cord	E31-2154-05	1	1	1	1	1	1	1
DC cord	E30-3035-05	1	1	1	1	1	1	1
Fuse (25A)	F51-0011-05	1	1	1	1	1	1	1
Fuse (4A)	F06-4029-05	1	1	1	1	1	1	1
Knob	k23-0712-04	1	1	1	1	1	1	1

Note : There is no TS-690S for M2.

Caution in Removing (Bottom) Cabinet

For a cabinet assembly fitted with an optional filter, a portion of the filter is exposed from the chassis when a lower casing is removed from the cabinet. If the cabinet is put on a working desk as is, PC board fitted with t he filter may be destroyed due to weight of the cabinet assembly.
When removing the lower casing, take care so that the filter is not in touch with a working desk, etc.

CIRCUIT DESCRIPTION

Frequency Configuration

The TS-690S/450S uses triple conversion in receive mode, double conversion in CW and FM transmit modes, and triple conversion in SSB, AM, and FSK transmit modes.

When the DSP-100 (digital signal processor) is installed, the 36.892kHz IF (fourth IF) signal goes to the DSP unit during reception; during transmission, the input signal from the microphone or key goes to the DSP unit, and a 455kHz signal goes to the main unit according to the mode. The DSP only produces a 455kHz carrier in FM mode, and the VCOs for modulation operate in the same way as when there is no DSP.

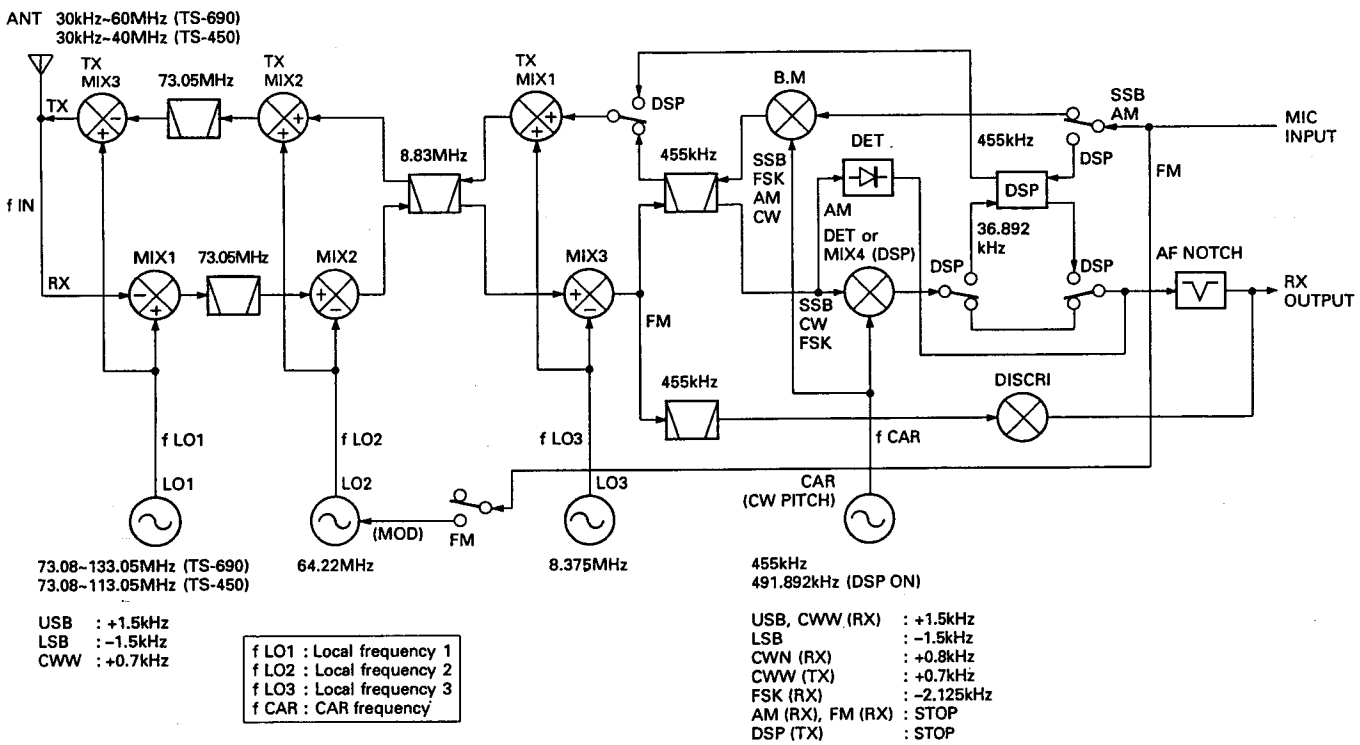

Fig. 1 Signal system frequency configuration

1) Frequency configuration

The receiver frequency in SSB mode is given by the following equation when the receiver tone produced by the input frequency (f_{IN}) from the antenna is zero beat (when an SSB signal with a carrier point of f_{IN} is zeroed in):

$$f_{IN} = f_{LO1} - f_{LO2} - f_{LO3} - f_{CAR} \quad \ldots\ldots\ldots (1)$$

Since f_{LO3} is generated by a crystal oscillator, and is input as a cancel loop* to the PLL circuit that generates f_{LO1} (as shown in Fig. 2), the receiver frequency is determined only by reference frequency f_{STD}, the PLL divide ratio, and DDS data. So the stability/accuracy of the reference frequency determines the overall frequency stability/accuracy of the transceiver.

The stability/accuracy of the reference crystal oscillator used in the TS-690S/450S is 10 ppm (−10 to +50°C). The stability/accuracy of the optional temperature-compensated crystal oscillator (TCXO, SO-2) is 0.5 ppm (−10 to +50°C).

The TS-690S/450S local oscillator and the CAR DDS circuits are independent of each other. However, they can be operated in a way similar to a cancel loop* configuration by changing the CAR and local oscillator data simultaneously by means of the microprocessor. This function allows changes in the f_{CAR} and f_{LO1} lines when the mode changes.

* The cancel loop is described in section 9 of PLL circuit configuration.

CIRCUIT DESCRIPTION

In transmit SSB mode or in other modes, the frequency is determined by the reference frequency (f_{STD}) and the PLL divide ratio. The display frequencies in the various modes are listed in Table 1. (In FSK mode, the TS-690S/450S displays the mark transmitter frequency.)

The pitch of the incoming signal in CW mode can be varied in 50Hz steps in the range 400 to 800Hz without changing the center frequency of the IF filter (variable CW pitch system).

Transmission in FM mode is carried out by applying the audio signal from the microphone to VCO2 and modulating f_{LO2}.

CAR is stopped by the DSP during reception in AM and FM modes and during transmission. When the DSP unit is connected, f_{CAR} is switched to the signal output from the DSP, and the carrier point is fixed at 455kHz during transmission.

Since the reference for the DSP is based on f_{STD}, the stability/accuracy of the operating frequency is unchanged even when the DSP is connected.

Mode	Display frequency
USB, LSB	Carrier point frequency
CW	Transmit carrier frequency
FSK	Mark transmit frequency
AM, FM	IF filter center frequency

Table 1 Display frequency in each mode

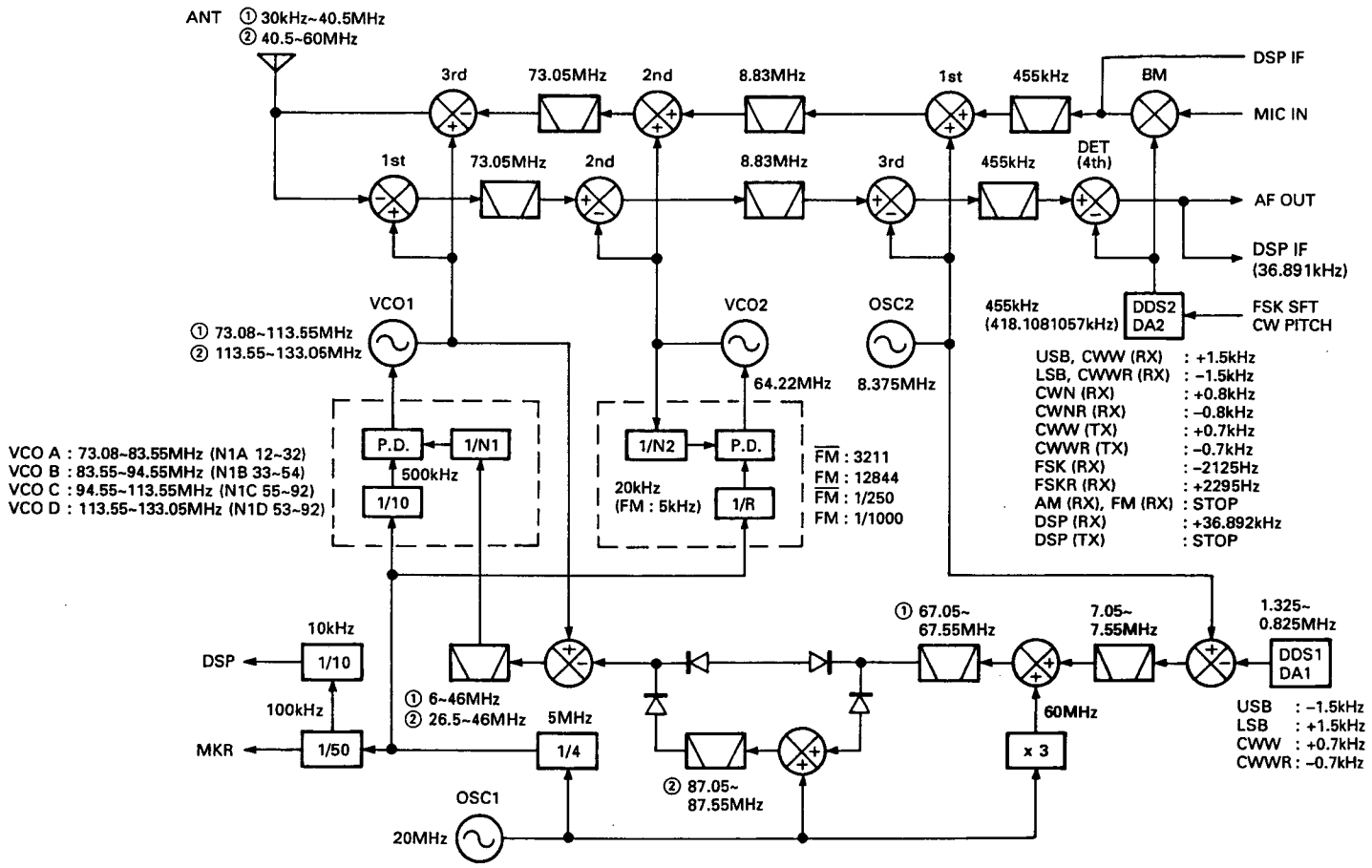

Fig. 2 PLL circuit frequency configuration

CIRCUIT DESCRIPTION

PLL Circuit Configuration

The TS-690S/450S PLL circuit comprises (1) a reference oscillator circuit (Ref. OSC), (2) an LO2 PLL loop, (3) an LO1 PLL loop, (4) a crystal oscillation circuit that generates LO3, and (5) a DDS that generates CAR and comprises a DLO PLL loop and a CAR signal generation circuit. These circuits are described below.

The divide ratio and DDS data to the PLL loops are controlled by the microprocessor, and all frequencies are based on the reference frequency (fSTD) using the single-crystal frequency management method. Figure 2 shows the frequency configuration of the PLL circuit. Figure 3 is a PLL block diagram.

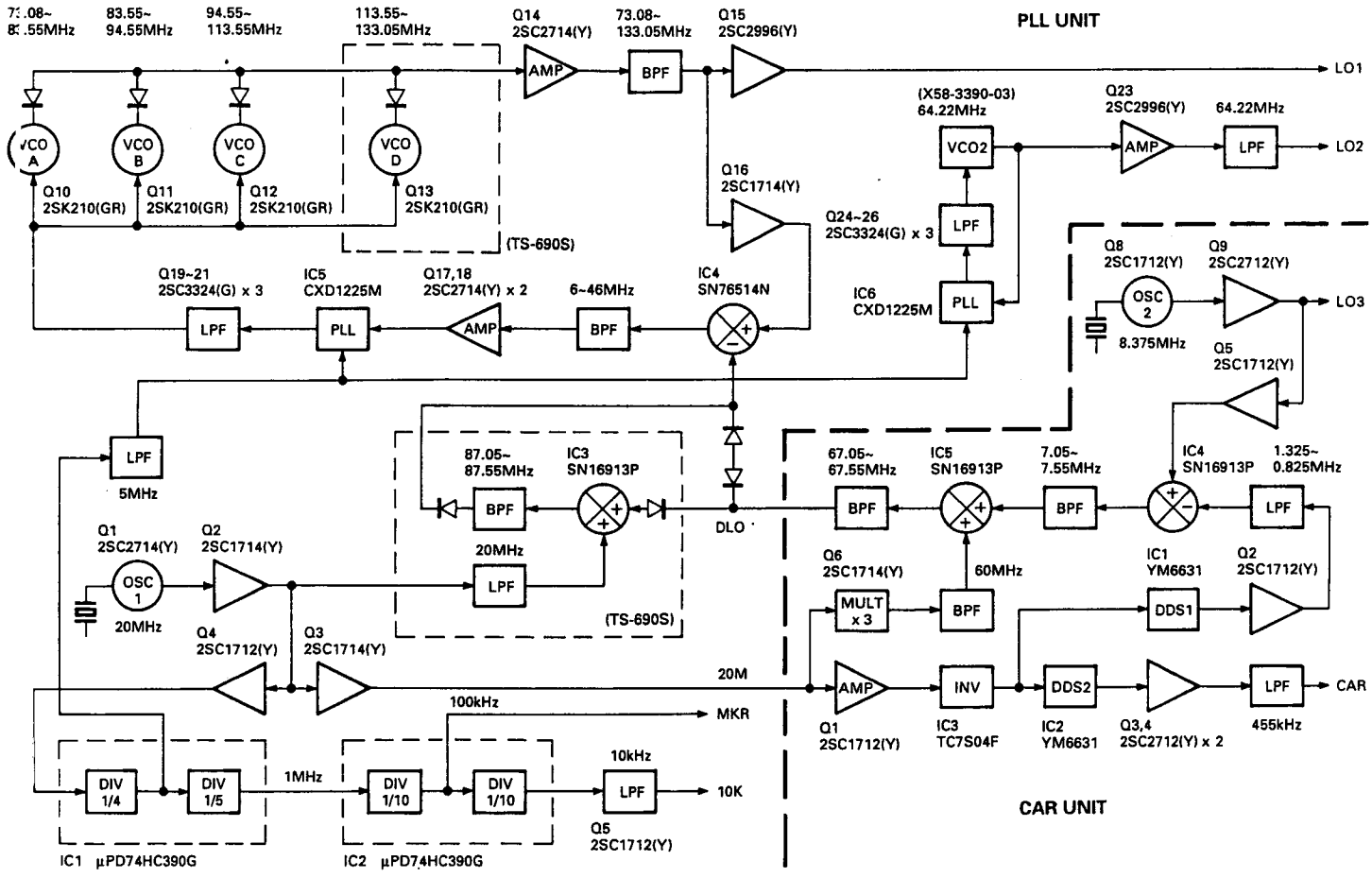

Fig. 3 PLL block diagram

1) Reference oscillator circuit (PLL unit OSC1)

The reference frequency (fSTD) used for frequency control is generated by the 20MHz crystal oscillator, X1 and Q1 (2SC2714). Two outputs are provided; one is used as the 20MHz reference frequency for the CAR unit, and the other is divided by four by IC1 (µPD74HC390G) to produce a 5MHz PLL reference signal fREF for other circuits, which goes to IC5 and IC6 (CXD1225M). The 5MHz signal is divided by five to produce a 1MHz signal, which is divided by 10 and 100 by IC2 (µPD74HC390G). A 100kHz marker signal appears at TP1, and the 10kHz signal passes through active low-pass filter Q5 (2SC2712), and is output as the reference signal for the optional DSP-100.

Crystal oscillator circuit OSC1 can be replaced by an optional TCXO (SO-2). The TCXO can be switched to by cutting jumper resistors W4 and W5.

CIRCUIT DESCRIPTION

2) LO2 (PLL loop)

Q1 (2SK508NV) of VCO2 (X58-3390-03) generates a signal of 64.22MHz. The 5MHz reference frequency (fREF) is applied to pin 5 of IC6 (CXD1225M), and is divided by 250 (1000 in FM mode) internally to produce a 20kHz (5kHz in FM mode) comparison frequency. The output from VCO2 is applied to pin 11 of IC6, and is divided by 3211 (12844 in FM mode) internally. It is then compared with the 20kHz (5kHz in FM mode) reference signal by the phase comparator to lock the VCO2 frequency. Divide ratio data is supplied by the digital circuit.

The output is amplified by amplifier Q23 (2SC2996) and passes through a low-pass filter. The impedance is converted and the signal is output.

3) LO1 (PLL loop)

Four VCO1s, Q10 to Q13 (2SK210 x 4; three VCO1s, Q10 to Q12, for the TS-450S), generate 73.08 to 133.05MHz signals (73.08 to 113.05MHz signals for the TS-450S). The 5MHz reference signal (fREF) is applied to pin 5 of IC5 (CXD1225M) and is divided by 10 internally to produce a 500kHz comparison frequency. The output signal from VCO1 passes through amplifier Q14 (2SC2714) and a band-pass filter, and is divided into two signals. One signal is output to the RF unit, the other is applied to pin 5 of mixer IC4 (SN76514N). For VCOA, the band-pass filter narrows the band and reduces the harmonic level by switching.

The 67.05 to 67.55MHz DLO output from the CAR unit is input directly to pin 11 of mixer IC4 if VCO1 is 73.08 to 113.55MHz (VCOA to C). If VCO1 is 113.55 to 133.05MHz (VCOD), the PLO signal and 20MHz fSTD are mixed by mixer IC3 (SN16913P). The signal of 87.05 to 87.55MHz is applied to pin 11 of mixer IC4. This switching is done according to the BCH data from the digital unit. The signal passes through the band-pass filter, becomes a signal of 6 to 46MHz and one of 26.5 to 46MHz, passes through amplifiers Q17 and Q18 (2SC2714 x 2), and is applied to pin 13 of IC5.

This signal is divided by N1 internally, compared with a 500kHz signal by the phase comparator, and the mixer output frequency is locked in 500kHz steps. Divide ratio N1 is sent from the digital unit as data (12 to 92, 53 to 92) that covers 30kHz to 40.5MHz, 40.5 to 60MHz) in 500kHz steps. One of the four VCOs is selected according to the VCO switching data from the digital unit.

DLO sweeps in 10Hz or 1Hz steps. The LO1 output covers 73.08 to 133.05MHz in 10Hz or 1Hz steps, and is output to the RF unit.

Local oscillator	VCO	PLL IC	Comparison freq'/ division ratio R	Variable division ratio N	VCO frequency (MHz)
LO1	VCOA	IC5	500kHz/10	12~32	73.08~83.55
	VCOB			33~54	83.55~94.55
	VCOC			55~92	94.55~113.55
	VCOD			53~92	113.55~133.05
LO2	VCO2	IC6	20kHz/250 5kHz/1000 : FM	3211 12844 : FM	64.22

Table 2 PLL data and frequency

4) Unlock signal (PLL unit)

If each PLL loop is unlocked, pins 8 of IC5 and IC6 go low, and the signal passes through the inverter and goes to the digital unit as a high UL signal. The microprocessor puts up " . . . . . " (decimal points only) on the display or outputs the RBK or ABK signal.

5) DDS reference signal (CAR unit)

The 20MHz reference signal from the PLL unit is amplified by Q1 (2SC2712), buffered by inverter IC3 (TC7S04F), and supplied to pin 55 (CLK) of IC1 and IC2 (YM6331). This signal is halved by IC1 and IC2 to produce a 10MHz DDS reference signal.

6) DLO (CAR unit)

A digital signal of 1.325 to 0.825MHz is generated by IC1 (YM6331), converted to analog by the digital-to-analog (D/A) converter comprising CP1, CP2, and Q2 (2SC2712), passed through a low-pass filter, and applied to mixer IC4 (SN16913P), where it is mixed with a 8.375MHz signal (LO3). The resulting signal passes through a band-pass filter to produce a signal of 7.05 to 7.55MHz. The signal is input to mixer IC5 (SN16913P), where it is further mixed with the 60MHz signal converted by double circuit Q6 (2SC2714), passes through a band-pass filter, and goes to the PLL unit as signal DLO of 67.05 to 67.55MHz.

7) LO3 (CAR unit)

Local oscillator signal LO3 is generated by 8.375MHz crystal oscillator X1 and Q8 (2SC2712), and is split into two signals. One signal is output to the LO1 PLL cancel loop, and goes to mixer IC4 (SN16913P). The other signal is output to the RF unit as LO3. The local oscillator signal from the crystal oscillator circuit is input to the PLL loop to cancel drift.

CIRCUIT DESCRIPTION

8) CAR (CAR unit)

A digital signal of about 455kHz is generated by IC2 (YM6331), converted to an analog signal by the D/A converter comprising CP3, CP4, and Q3, Q4 (2SC2712 x 2), passed through a low-pass filter, and output to the IF unit as the CAR signal.

When receiving in AM and FM modes and DSP transmitting, DDS generation stops. The modes, such as SSB, CW, and FSK, are switched, the IF shift and carrier point are adjusted finely, and the pitch is changed in CW mode. In FSK mode, FSK modulation is performed directly by IC2 using an external RTK signal.

9) Cancel loop

If the local oscillator is a crystal oscillator or LC oscillator, there is frequency drift due to the temperature characteristics of the circuit and the operating frequency. The frequency configuration shown in Figure 4 is used to cancel the oscillator frequency drift.

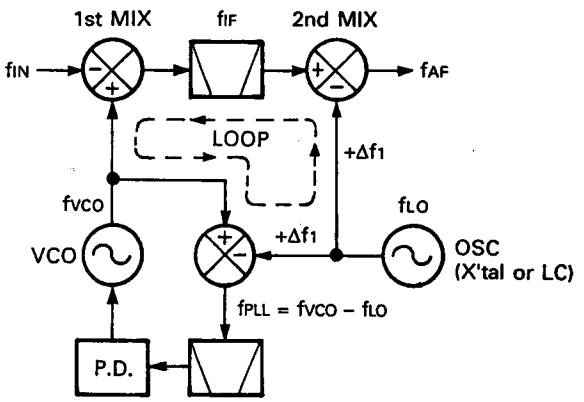

Fig. 4 Cancel loop (OSC)

If the oscillator shifts by +Δf1 due to temperature drift, fIF shifts by fIF + Δf1, and fVCO shifts by fVCO + Δf1 to make fIN and fAF equal. The VCO frequency is mixed with the oscillator frequency in the PLL loop, is made equal to frequency fPLL before drift occurs ((fVCO + Δf1) − (fLO + Δf1) = fVCO − fLO)), and the PLL is kept locked. A loop in which the oscillator temperature drift does not affect frequencies fIN and fAF is called a cancel loop.

10) DDS circuit configuration

The DDS IC has been developed with standard cells to implement a high-speed circuit and large-capacity ROM at low cost.

- **IC configuration**

IC configuration is as follows:

There are two 28-bit registers for setting frequency data, one 28-bit frequency shift register for addition to the frequency registers, a 23-bit parallel signal input section for frequency modulation with parallel signals, and a data entry and selection section.

There is a frequency-modulation section comprising 28-bit adders for adding frequency data and frequency modulation data; a phase data operation section that adds data from the frequency modulation section and 28-bit phase data register; and a SIN-ROM that converts phase data to sine waves.

- **Frequency/shift data setting**

Using serial signals synchronized with clock pulses, 30 bits (2 bits that specify the destination for which data is set, and 28 bits of frequency data) are set in the three internal registers.

- **Frequency register selection**

The data set in the two frequency registers is selected by the SLAB input of the DDS IC. This pin handles the ABSL signal for IC1, and the CASL signal for IC2. This function eliminates the need for the TS-690S/450S to set frequency data for each transmission/reception with the microprocessor.

- **Frequency data selection**

The SPSL input of the DDS IC selects whether to use the data in the internal frequency shift register or the data from the parallel input as frequency modulation data.

- **Frequency modulation**

The MDEN input of the DDS IC enables or disables frequency modulation. When frequency modulation is enabled, frequency data is added, and the result is input to the phase data operation section.

CIRCUIT DESCRIPTION

- **Phase data operation**

The target frequency phase data is output by accumulating 28-bit frequency data in the 28-bit phase accumulator.

$Fout = Fs/2^{28} \cdot Dsum$

Where:

Fs : DDS IC input frequency/2

Dsum : Frequency data + Frequency modulation data

If 2^{25} is set for Dsum when 1/8 Fs is output, the phase data must be increased by $\pi/8$.

So far, 28-bit absolute value operation has been used, but a 28-bit signed operation can also be used, assuming that the MSB is a sign. If complement data of 8000000 to FFFFFFFF (hex) is set, the phase moves in the negative direction for positive data.

- **SIN ROM**

Phase data from the phase data operation section is converted to sine wave data of 0000 to FFFF (hex) in 16-bit offset binary format.

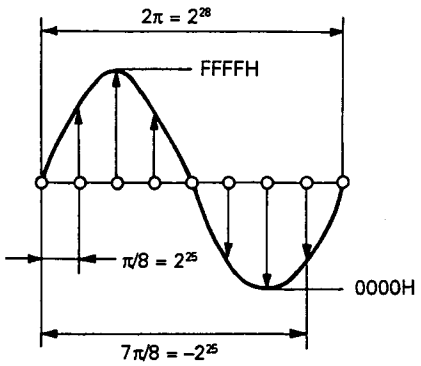

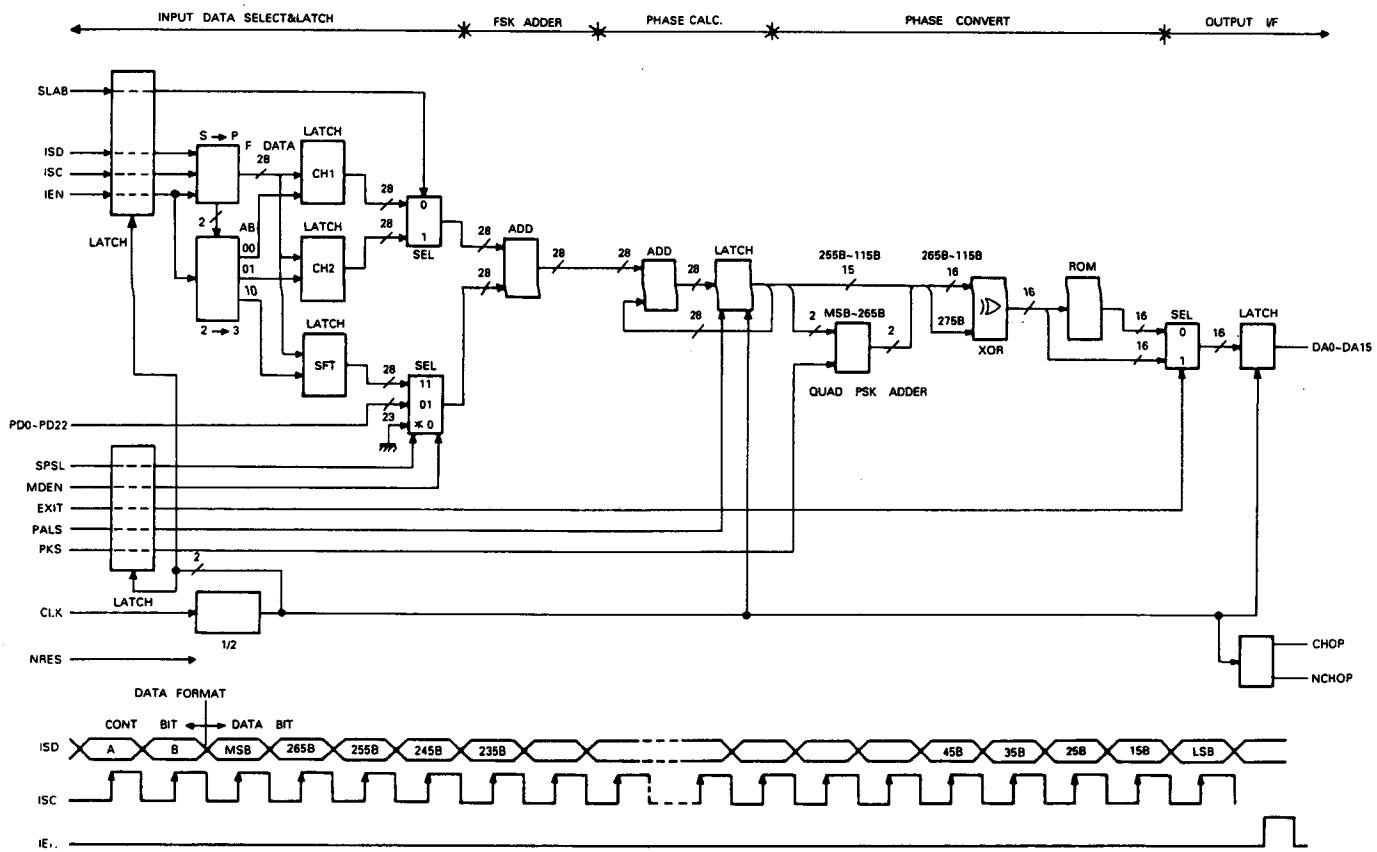

Fig. 5 DDS IC (YM6631) block diagram and data format

CIRCUIT DESCRIPTION

Receiver Circuit Configuration

The configuration of the receiver circuit is triple-conversion with a first IF of 73.05MHz, a second IF of 8.83MHz, and a third IF of 455kHz.

The incoming signal from the antenna passes through the antenna switch relay on the filter unit, and goes to the RF unit. The signal passes through a 20-dB attenuator and IF trap (low-pass filter) in the RF unit, is divided by 10 (or 9 for the TS-450S), and is applied to the band-pass filter (low-pass filter for 500kHz or less). For 1.6MHz or more, the signal passes through a high-pass filter to prevent interference from a high-output MF-band station.

The band-pass filter of 21.5 to 40.5MHz and 40.5 to 60MHz (21.5 to 40.5MHz only for the TS-450S) is followed by a preamplifier (2SK520) to improve the sensitivity. The preamplifier works only if AIP is off. If AIP is on, the preamplifier is bypassed to increase the dynamic range.

If AIP is off, the signal passing through the band-pass filter passes through the NFB amplifier comprising Q9 and Q10 (2SK520 x 2) connected in parallel. If AIP is on, the NFB amplifier is bypassed to increase the dynamic range. The signal passes through the IF track (low-pass filter), and is mixed with signal LO1 by first mixer Q14 to Q17 (2SK520 x 4) to produce a first IF signal of 73.05MHz.

The first IF signal of 73.05 MHz passes through the MCF (X1), is amplified by Q25 (3SK131), and mixed with the 64.22MHz LO2 signal by the second mixer Q26 and Q27 (2SK520 x 2) to produce a second IF signal of 8.83MHz.

The second IF signal of 8.83MHz is split into two signals. One goes to the NB amplifier, and the other passes through NB gate FET Q28 (3SK131) and then through one of the four types of 8.83-MHz IF filter: through, 6kHz, 2.4kHz, and 500Hz (2.4kHz and 500Hz are optional). The desired filter can be selected from the front panel.

The signal passing through the IF filter is mixed with the 8.375MHz LO3 signal by third mixer Q29 and Q30 (3SK131 x 2) to produce a third IF signal of 455kHz, which goes to the IF unit.

The signal is then amplified by Q2 (3SK131), and goes to a 455kHz IF filter. There are four types of 455kHz IF filter: 12kHz, 6kHz, 2.4kHz, and 500Hz (500Hz is optional), one of which can be selected from the front panel in the same way as for the 8.83MHz IF filter.

The signal from the filter is amplified by Q3 and Q8 (3SK131 x 2) in modes other than FM, SSB, CW, and FSK modes are detected by IC1 (μPC1037HA), and AM mode is detected by D15 (1N60). In FM mode, the signal is limit-amplified and detected by IC4 (MC3361D). The AF signal for each mode after detection passes through the select and notch modules, and goes to AF preamplifier Q30 (2SC2712).

The signal from the preamplifier passes through muting circuit Q31 (2SD1757K) and the AF potentiometer, and is amplified to the required level by AF power amplifier IC5 (μPC2002V).

1) Receiver front-end

For the RF BPF of 21.5 to 40.5MHz, preamplifier Q3 (2SK520) and Q4 is connected, and for 40.5 to 60MHz, preamplifier Q7 (2SK520) and Q8 is connected, and the signal is amplified by about 10 dB if AIP if off. The 28C data goes high for 21.5 to 26.5MHz, and low for 26.5 to 40.5MHz to switch the tuning capacity of L35 by Q6 and change the peak frequency.

If AIP is off and the signal passing through each band-pass filter is 21.5MHz or less, it passes through D28, and if the signal is more than 21.5MHz, it is amplified by the preamplifier, passes through D25 or D26, and enters the NFB amplifier comprising two J-FETs, Q9 and Q10 (2SK520 x 2) connected in parallel and having good large input characteristics. It is amplified by about 15dB, passes through D30, and goes to the first mixer. If AIP is on and the signal is 21.5MHz or less, it passes through D27, and if it is more than 21.5MHz, it passes through D61 or D63, and D29, and enters the first mixer directly.

If AIP is off and the signal is more than 21.5MHz, the RF signal gain increases, and the signal-strength meter reading increases. To reduce it to the level before 21.5MHz or less, the 455-kHz IF signal level gain is reduced by switching Q13 and Q14, or Q16 and Q17 of the IF unit. This is done if AIPB is high and the 28MC or 50MC data is low.

CIRCUIT DESCRIPTION

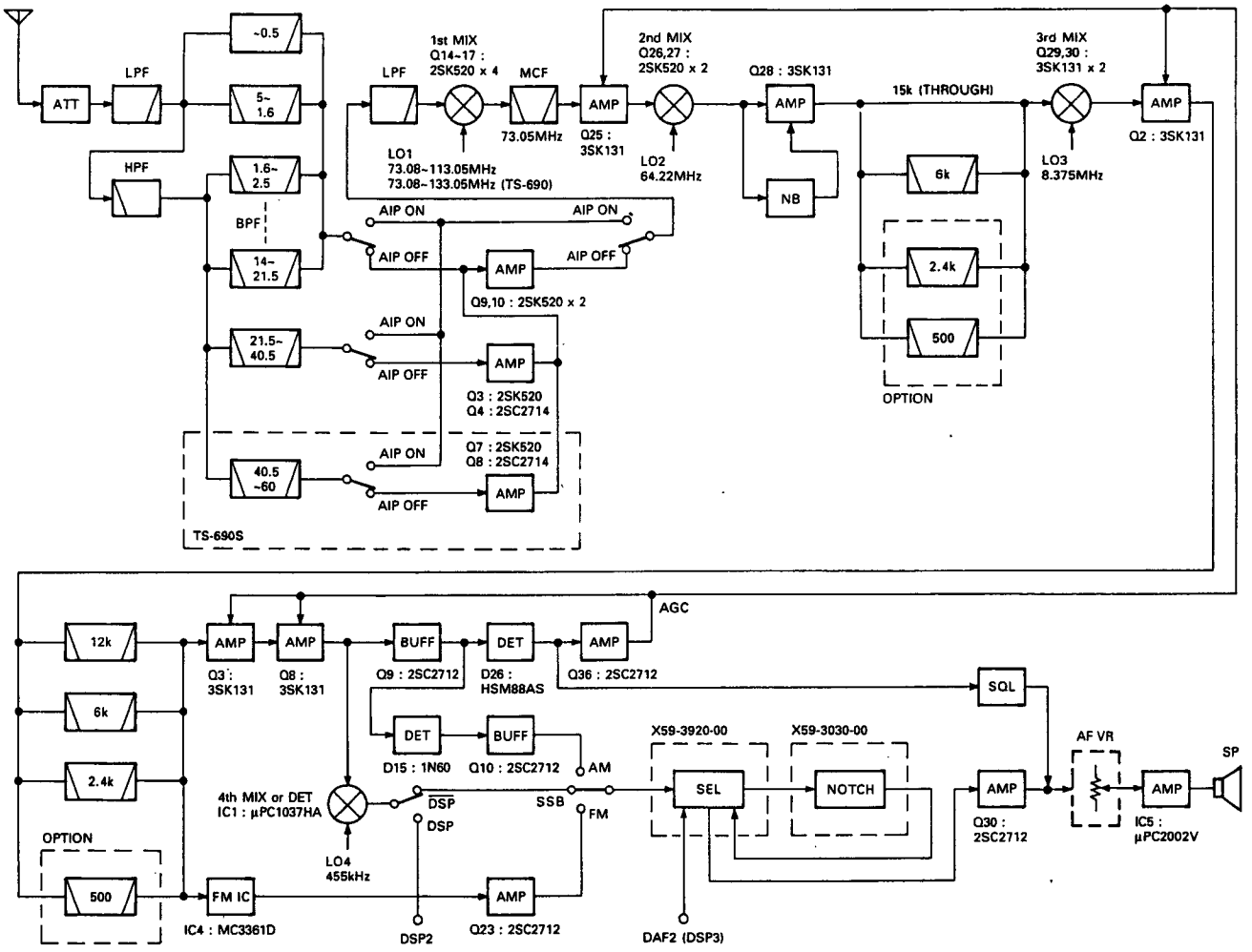

Fig. 6 Receiver block diagram

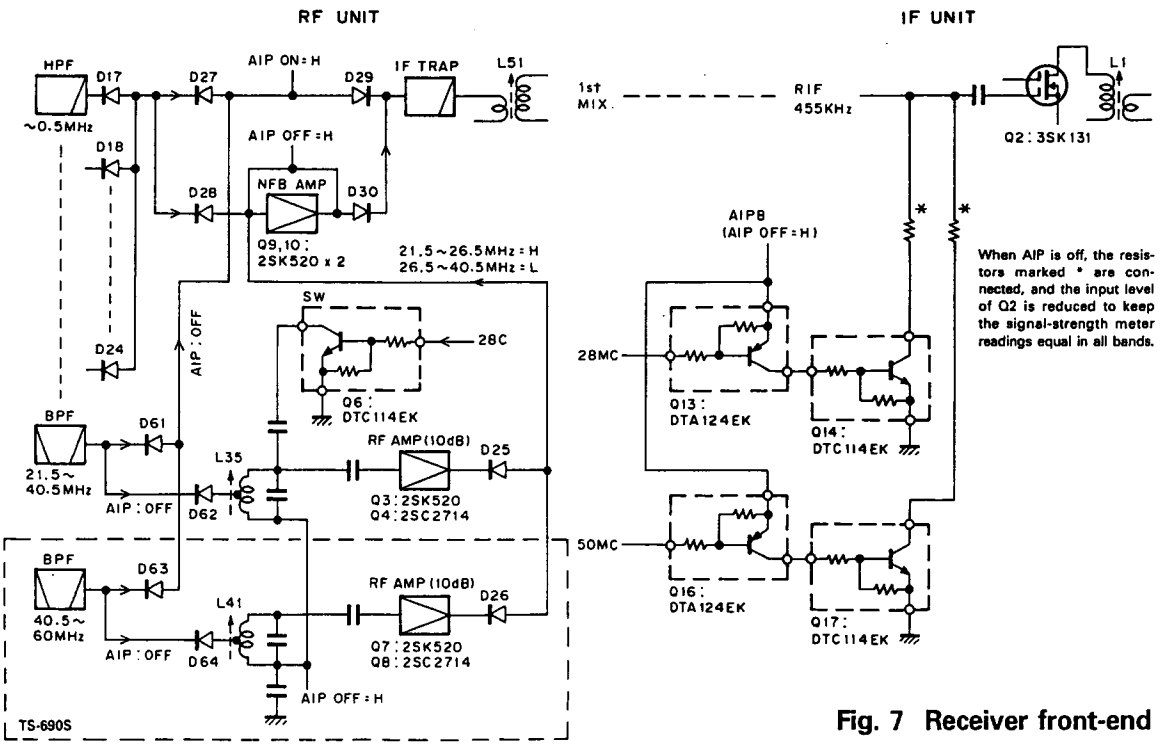

Fig. 7 Receiver front-end

CIRCUIT DESCRIPTION

2) Noise blanker circuits

NB1 is a noise blanker circuit that blanks for short-period pulses such as ignition noise. The 8.83MHz IF signal generated from the first IF of 73.05MHz by the second mixer is amplified by noise amplifier Q31 to Q34, passes through buffer Q36, and is noise-detected by D53. This signal switches Q37 and turns on Q39 and Q40, and Q42 blanks the IF signal line according to the noise.

NB2 is a noise blanker circuit that blanks noise having a comparatively long period and a large pulse width, like woodpecker noise. The signal is noise-detected in the same way as for NB1, passes through the Q35 switch, and enters the NB2 module unit (X59-3350-00) to generate the pulse width and period synchronizing with the woodpecker noise.

IC1 (TC4011BF) in the module unit is set for a pulse width of 40 ms. Even short-period noise like an ignition pulse can be blanked by switching the noise, so the desired signal is not obtained. To prevent this, a one-shot multi is implemented using two IC1s so that the next pulse is not blanked for 40ms after one shot is issued.

When NB2 is on, NB1 also operates.

Both NB1 and NB2 fix the emitter voltage of Q37, keeping the threshold level constant.

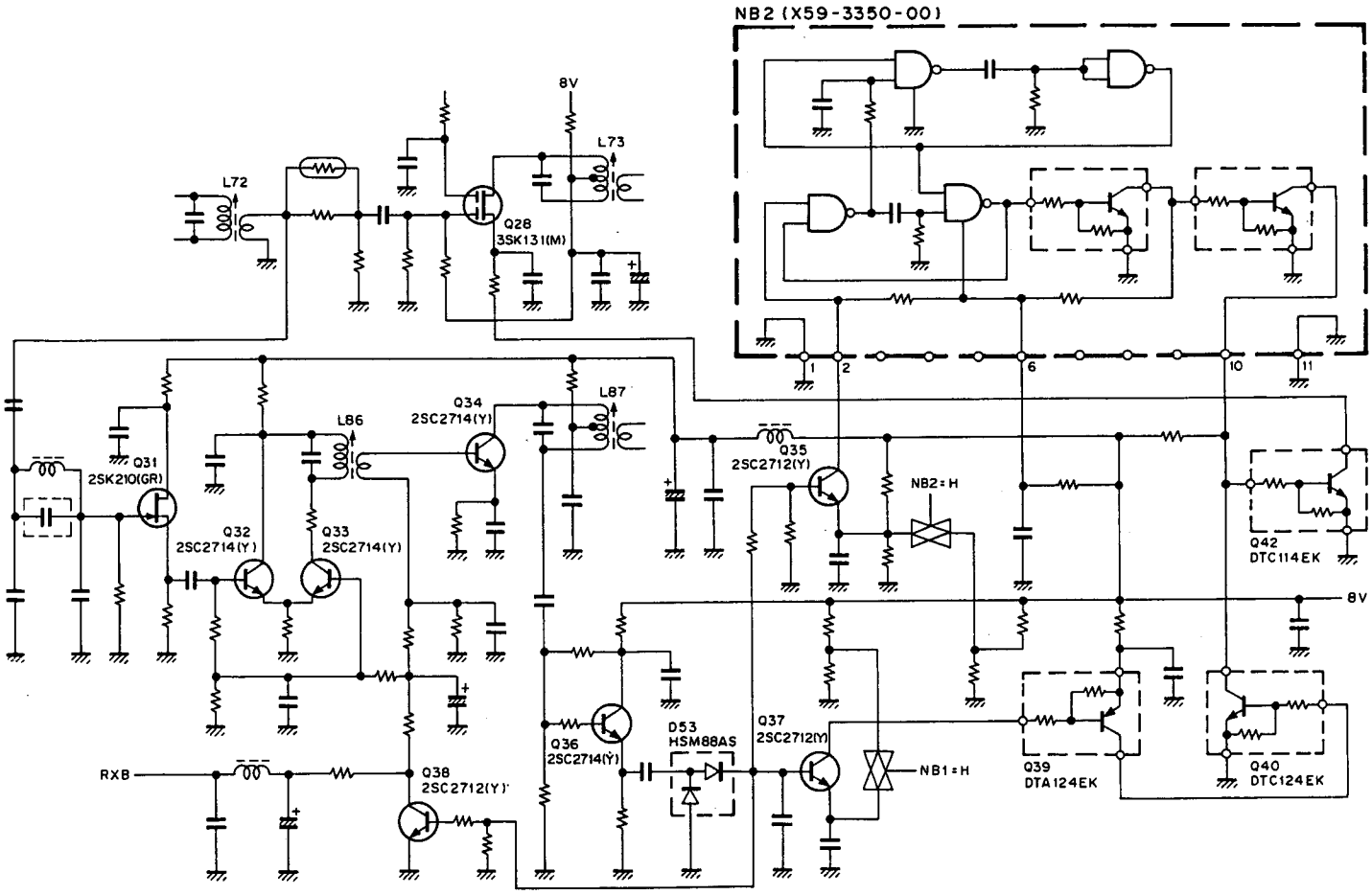

Fig. 8 NB circuit

CIRCUIT DESCRIPTION

3) Squelch circuit

In modes other than FM, the 455kHz IF signal is detected by D26, passed through Q24 and Q25, and a voltage proportional to the signal level appears at the base of Q26. When the SQL VR is turned clockwise, the emitter voltage of Q26 increases, and Q27 and Q40 are switched.

In FM mode, a voltage proportional to the FM noise level appears at pin 12 (squelch trigger input) of IC4. As the IF signal increases, the noise level decreases, and the voltage at pin 12 of IC4 decreases, making pin 14 low. When the SQL VR is turned clockwise, the voltage at pin 12 of IC4 increases, and pin 14 goes high. Q27 and Q40 are switched as in modes other than FM.

Q31 turns on to mute the AF signal line, and Q41 turns on to ground pin PSQ of connector ACC2.

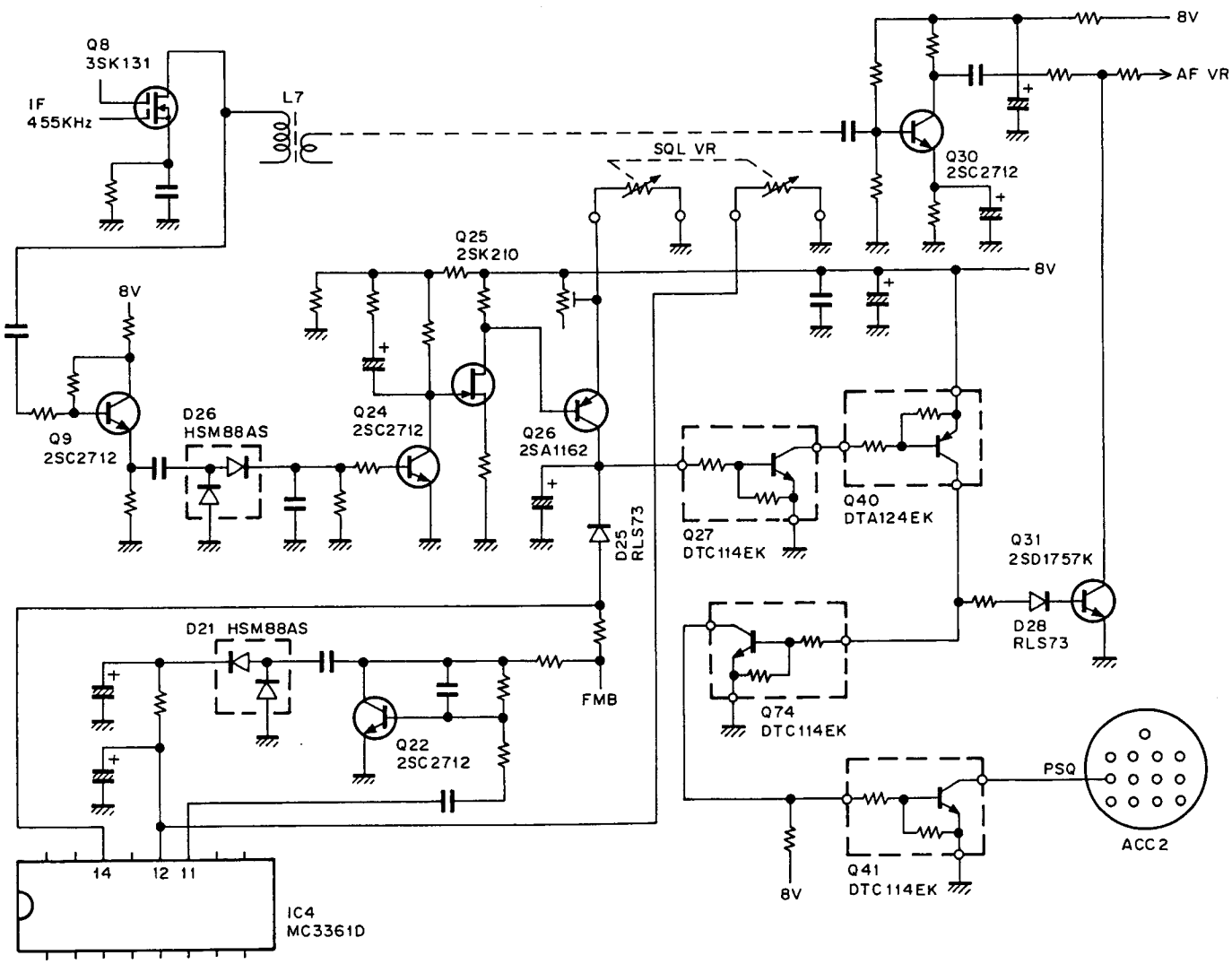

Fig. 9 Squelch circuit

CIRCUIT DESCRIPTION

4) Select circuit

If the DSP-100 is not connected, the AF signal after detection for each mode is input to pin 3 of the select module (X59-3920-00) and output from pin 9. If the DSP-100 is connected, IC1 becomes the fourth mixer, and a 36.892kHz IF signal is output in SSB, CW, and FSK modes. This signal is amplified by Q29, input to the DSP-100 via pin DSP2, internally processed, and output to DSP3 pin DAF2 as an AF signal. The AF signal is input to pin 8 of the select module, and output from pin 9. In AM and FM modes and if the DSP-100 RX switch is off, the signal is input to pin 3 of the select module, and output from pin 9, as if the DSP-100 is not connected. The DAF1 signal is not used by the DSP-100.

The signal output from pin 9 of the select module is applied to pin 6 of the notch module. The signal passing through the notch filter and a flat signal are output from pin 2 (NOTCH) and pin 4 (FLAT), and input to the select module.

If NOTCH is on, the signal input from pin 2 of the notch module is output from pin 7, and if NOTCH is off, or in FM mode, the signal input from pin 4 is output from pin 7.

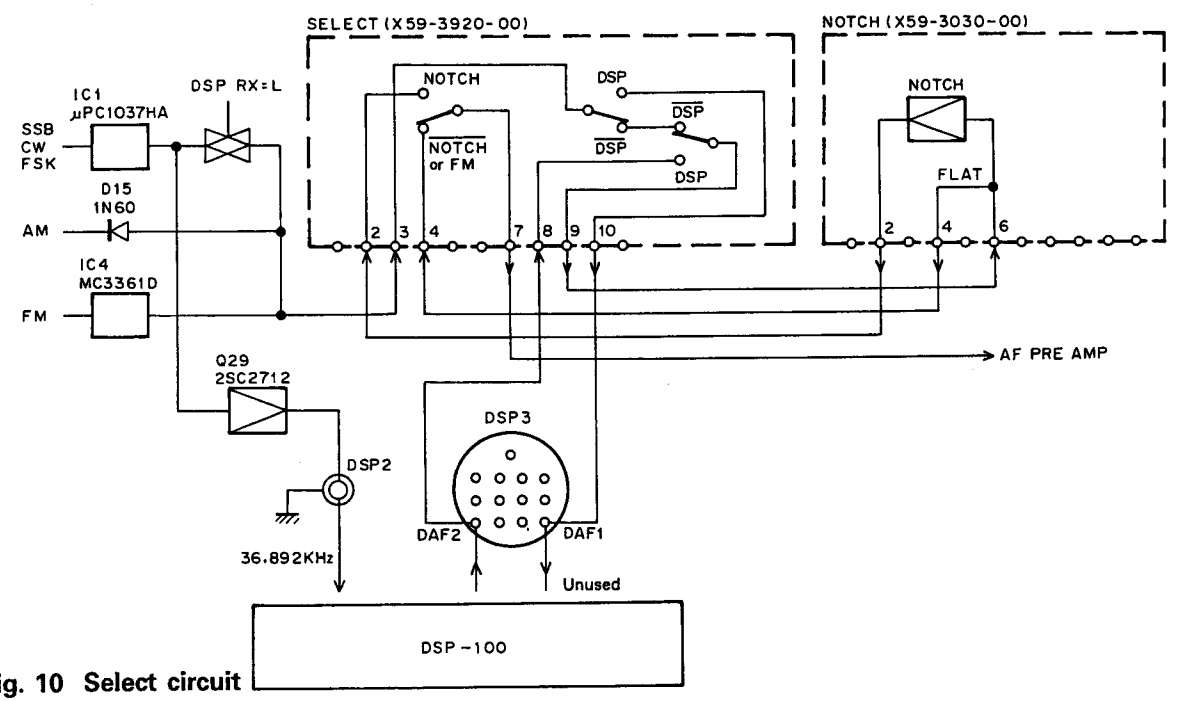

Fig. 10 Select circuit

5) Notch circuit

The notch circuit is an audio notch filter. The notch frequency can be varied in the range 450Hz to 3kHz with the NOTCH control.

Although an audio filter with a narrow null point is a superior technique, it is not easy to use because the notch point is difficult to obtain. So a notch filter having a wider bandwidth than normal is used.

The circuit uses a variable band-pass filter (peak filter) or bridged T active filter, and synthesizes notch characteristics by summing input/output signals. The module contains chips to improve its stability. Thus, the actual notch attenuation is 30 to 40dB in all variable ranges.

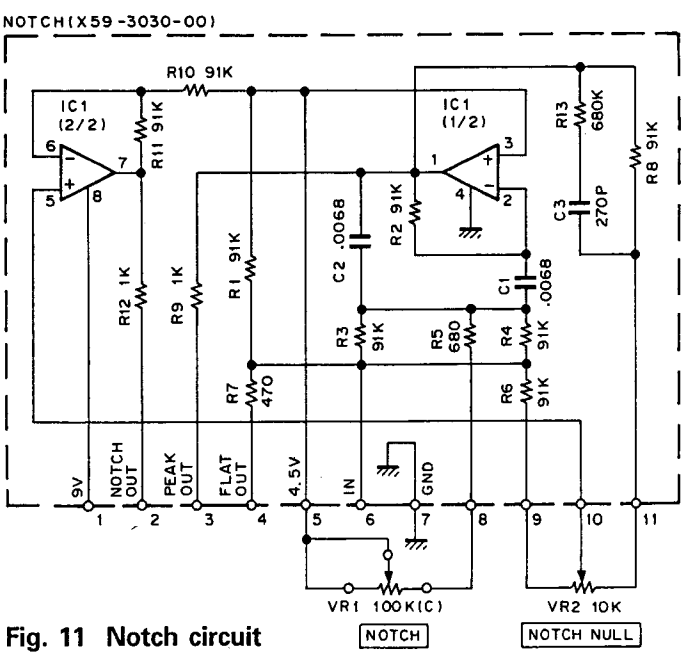

Fig. 11 Notch circuit

CIRCUIT DESCRIPTION

6) Signal-strength meter circuit

In modes other than FM, the signal-strength meter circuit comprises operational amplifier IC6 (1/2). The 455kHz IF signal is detected by D26, passes through Q36, and appears as the AGC voltage.

If the reference voltage of the signal-strength meter is applied to the + pin (pin 3) of reverse amplifier IC6 (1/2) and the AGC voltage is applied to the – pin (pin 2), the AGC voltage change is output from pin 1 to the digital unit as the SM signal. The reference voltage is the voltage immediately before the signal-strength meter is turned on by VR5 after the AGC voltage is adjusted to 3V when there is no signal.

In FM mode, the 455kHz FM IF signal is amplified by Q32 and Q33, and detected by D30. This voltage is output directly to the digital unit as the SM signal.

The digital unit converts the analog signal to a digital value, performs operations in non-FM mode in FM mode, and drives the meter.

The meter is adjusted with VR1 immediately after S1 is turned on when a 6dBμ SSG is input from the antenna, and S9 and S9 + 60dB are adjusted in each band in adjustment modes 8 to 10. In FM mode, only the signal-strength meter full scale is adjusted with VR4.

7) dB meter circuit

The AF signal output from AF preamplifier Q30 and amplified by Q38 becomes the ANO signal with a constant level regardless of the AF VR. This signal is amplified by Q39, and rectified by D31 to produce the db meter voltage. The voltage is connected to the ALC meter voltage by D69, and is output to the digital unit as the ALDB signal. If the output from pin ANO of connector ACC2 is 300mV at the 4.7kΩ termination, 0dB on the db meter goes on.

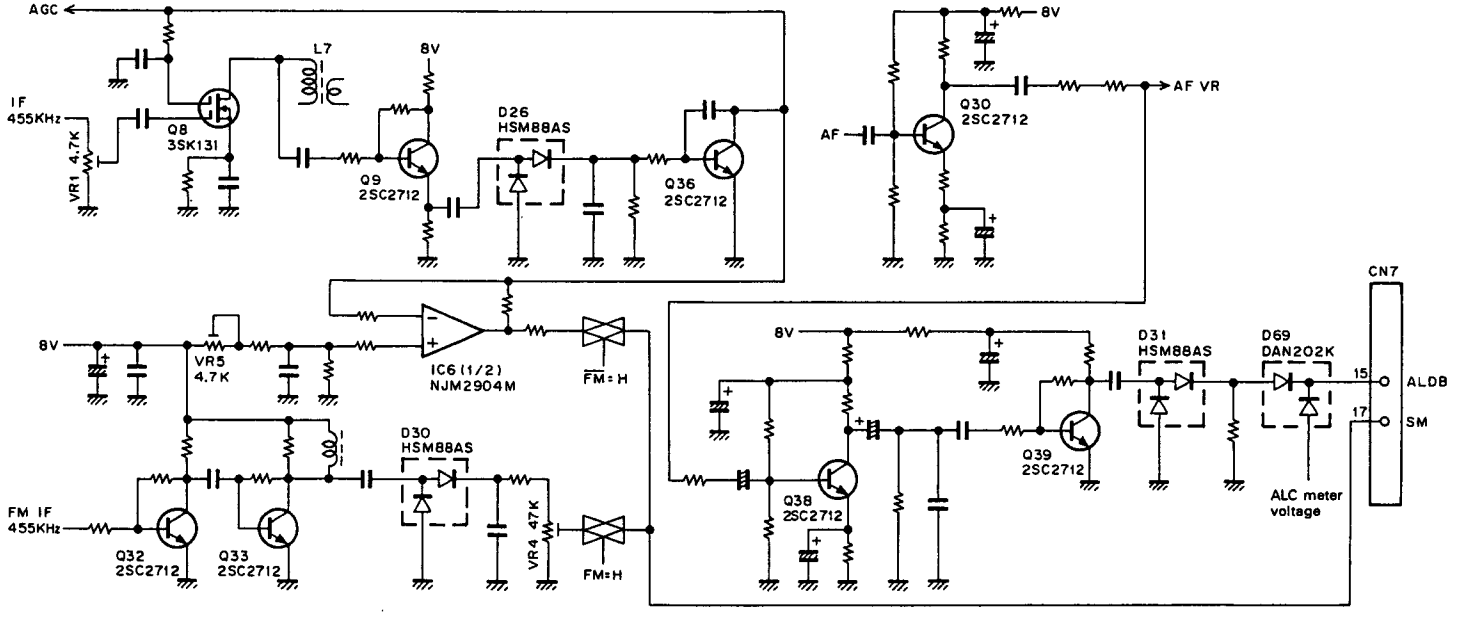

Fig. 12 AGC, signal-strength meter, and dB meter circuits

CIRCUIT DESCRIPTION

8) IF filter selection

Two optional 8.83MHz filters and one 455kHz filter can be installed.

- **Initial condition**

Display	8.83MHz	Display	455kHz
No display	Through (LC filter)	12kHz	L72-0315-05
6kHz	L71-0260-05	6kHz	L72-0319-05
2.4kHz*	Option (Not installed)	2.4kHz	L72-0371-05
500Hz*	Option (Not installed)	500Hz*	Option (Not installed)

Frequencies marked * are not displayed by operating the filter changeover switch. They can be displayed by turning the filter switch on when an optional filter is installed.

- **Optional filter types**

8.83MHz		455kHz	
2.4kHz	YK-88S-1	500Hz	YG-455C-1
500Hz	YK-88C-1		

Filters for bands other than those described above can be installed. In this case, the bandwidth displayed on the panel is not the same as the actual bandwidth.

Item	Rating
Nominal center frequency	73.05MHz
Passband width	±7.5kHz or more at 3dB
Attenuation bandwidth	±30kHz or less at 20dB
Ripple	1.0dB or less
Insertion loss	2.0dB or less
Guaranteed attenuation	40dB or more at fo – 910kHz (Spurious : 20dB or more at fo ± 1MHz)
Center frequency deviation	Within ±1.5kHz at 3dB
Terminating impedance	2kΩ ± 10%

MCF (L71-0423-05) (RF unit X1)

Item	Rating
Nominal center frequency (fo)	8830kHz
Passband width	±3.0kHz or more at 3dB
Attenuation bandwidth	fo ± 12kHz or less at 18dB
Guaranteed attenuation	30dB or more within fo ± 1MHz (Spurious : 10dB or more at fo–fo+500kHz)
Ripple	0.5dB or less
Insertion loss	1.0dB or less
Terminating impedance	2500Ω/3pF

MCF (L71-0260-05) (RF unit X2)

Item	Rating
Nominal center frequency (fo)	8830kHz
3dB attenuation bandwidth	±50kHz or more (from 8830kHz)
Guaranteed attenuation	35dB or more at 9.285MHz (+455kHz) 45dB or more at 9.74MHz (+910kHz)
Ripple	1.0dB or less
Insertion loss	6dB or less
Input and output matching impedance	330Ω

Ceramic filter (L72-0351-05) (RF unit CF1)

Item	Rating
Nominal center frequency	455kHz
6dB bandwidth	±6kHz or more (from 455kHz)
50dB bandwidth	±12.5kHz or less (from 455kHz)
Ripple	3dB or less (within 455 ± 4kHz)
Insertion loss	6dB or less
Guaranteed attenuation	35dB or more (within 455 ± 100kHz)
Input and output matching impedance	2.0kΩ

Ceramic filter (L72-0315-05) (IF unit CF1)

Item	Rating
Nominal center frequency	455kHz
6dB bandwidth	±3kHz (from 455kHz)
50dB bandwidth	±9kHz (from 455kHz)
Ripple	2dB or less (within 455 ± 2kHz)
Insertion loss	6dB or less
Guaranteed attenuation	60dB or more (within 455 ± 100kHz)
Input and output matching impedance	2.0kΩ

Ceramic filter (L72-0319-05) (IF unit CF2)

Item	Rating
Center frequency	455 ± 0.20kHz
6dB bandwidth	±1.2 ~ ±1.4kHz
60dB bandwidth	4.5kHz or less
Guaranteed attenuation	60dB or more at ±100kHz
Spurious	40dB or more at 600~750kHz
6dB band ripple	2dB or less
Insertion loss	6dB or less
Input and output matching impedance	2.0kΩ

Ceramic filter (L72-0371-05) (IF unit CF3)

CIRCUIT DESCRIPTION

Transmitter Circuit Configuration

The audio signal from the microphone is input to CN6 of the IF unit. The signal is split and directed to the base of VOX amplifier transistor Q73 and microphone amplifier IC15. The signal input to IC15 is amplified by about 20dB. The signal from the data communication input/output pin (rear PACKET) is also input to IC15. The signal output from IC5 is split and directed to the microphone amplifier output for the optional DSP-100, the FM microphone amplifier, and the SSB, AM microphone gain potentiometer.

In SSB and AM modes, the signal passing through the microphone gain potentiometer is amplified by Q43 (2SC3722K), and input to balanced modulator IC8 (AN612). In AM mode only, the AM signal is generated by breaking the balance of IC8. Q43 does not operate in FM, CW, and FSK modes because the emitter voltage is applied via diodes D39 and D40. The 455kHz DSB signal from IC8 passes through transmission switching diodes D12, D11, and D2, and through filter switching diodes D6 and D5 (SSB), or D4 and D3 (AM) to produce the 455kHz SSB and AM signals. These signals are input to CN6 (TIF) of the RF unit from W1 (TIF).

The 8.375MHz LO3 signal from the CAR unit is input to pin LO3 of CN7 of the RF unit, and goes to first transmit mixer IC5 (AN612). The TIF signal goes to IC5, and is mixed with the LO3 signal to produce the 8.83-MHz signal. The output from IC5 passes through ceramic filter CF1 and transmission switching diodes D50 and D45. In modes other than FM, the signal passes through filter switching diodes D47, D5 x 2 (MCF : 6k), D6 and D42. In FM mode, the signal passes through D46, D41, and D40. The filtered signal is automatic-level-controlled and keyed by Q48.

The 64.22MHz LO2 signal from the PLL unit is input to pin LO2 of RF unit CN11, passes through transmission switching diode D59, and is mixed with the 8.83MHz signal by second mixer Q45 and Q46 to produce a 73.05MHz signal. The LO1 signal (VCO) from the PLL unit is input to the LO1 pin of RF unit CN10, amplified by Q24, passes through transmission switching diode D37, and is mixed with the 73.05MHz signal by third mixer Q20 and Q21 to produce the desired signal. The signal is input to Q19, and its gain controlled. The resulting signal is amplified by Q18 (2SC2954) to produce a drive output, which goes to the final unit from CN9.

The signal is amplified to the power for each type by the final unit, harmonics are attenuated by the filter unit, and the resulting signal is output from the antenna connector. In FM mode, the output from IC15 of the IF unit passes through FM microphone module Z7 (X59-3000-03) of the emphasis IDC circuit, is output from CN3 (FMM), and is input to CN5 of the PLL unit to modulate LO2 (64.22MHz).

The carrier for CW, FM, and FSK is adjusted to the correct level by changing the current through pin diode D36 (MI204) of the IF unit with the carrier potentiometer. The carrier passes through switching diodes D35 and D34, and is input to RF unit CN6 (TIF) from W1 (TIF). The signal follows the same route as for SSB, and is radiated from the antenna.

CW keying is performed by the ALC voltage of the second gate of Q48 of the RF unit and the CKY signal of the drain.

CIRCUIT DESCRIPTION

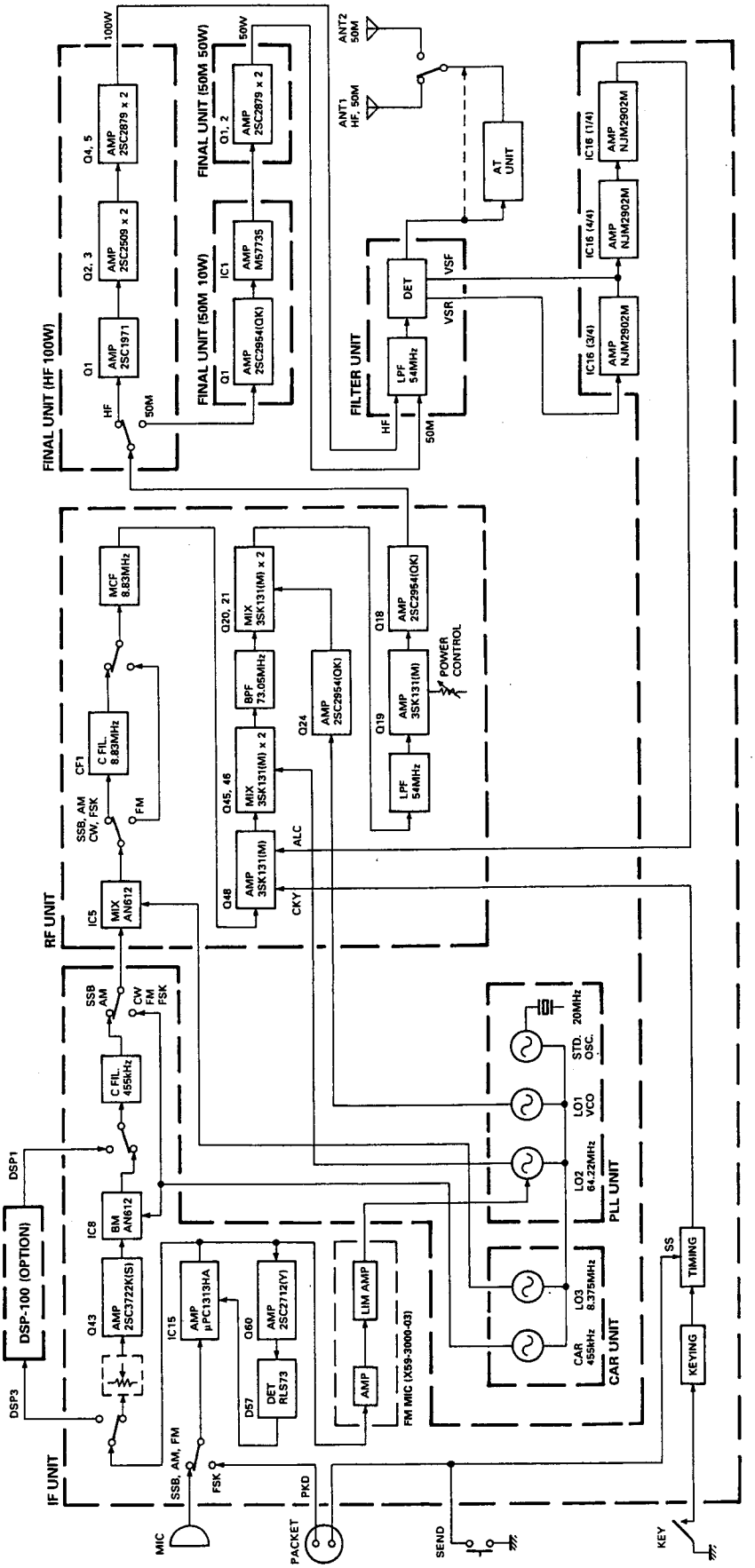

Fig. 13 Transmitter block diagram

CIRCUIT DESCRIPTION

1) ALC circuit

The ALC circuit of the TS-690S/450S is based on that of the TS-680S, so its operations are almost the same.

IC16 (1/4) controls the ALC and power. The output from IC16 (4/4) goes to the – pin (pin 2) of IC16 (1/4), and this output and the power control voltage applied to the + pin (pin 3) control the differential amplifier. If there is a transmission output, the voltage at the – pin (pin 2) of IC16 increases, and the output from IC16 (1/4) decreases. If this output falls below the ALC voltage (about 2.5V), the ALC takes effect. The power is controlled by changing the voltage at the + pin (pin 1) of IC16 (1/4). The minimum power is set by VR18 of the IF unit.

The power control voltage (PCV) changes with the power supply voltage and temperature. When the power supply voltage increases, the PCV is limited by zener diodes D65 (RLZ13B) and D64 (RLZ3.6B) to prevent overpower. If the power supply voltage drops, the power is decreased. If the temperature rises, the resistance of thermistor TH2 decreases, and the PCV increases, but overpower is prevented by the temperature characteristics (negative) of the zener diodes. If the temperature decreases, the PCV is decreased by the thermistor to decrease the power. The PCV controls the second gate of Q19 of the RF unit and the drive level.

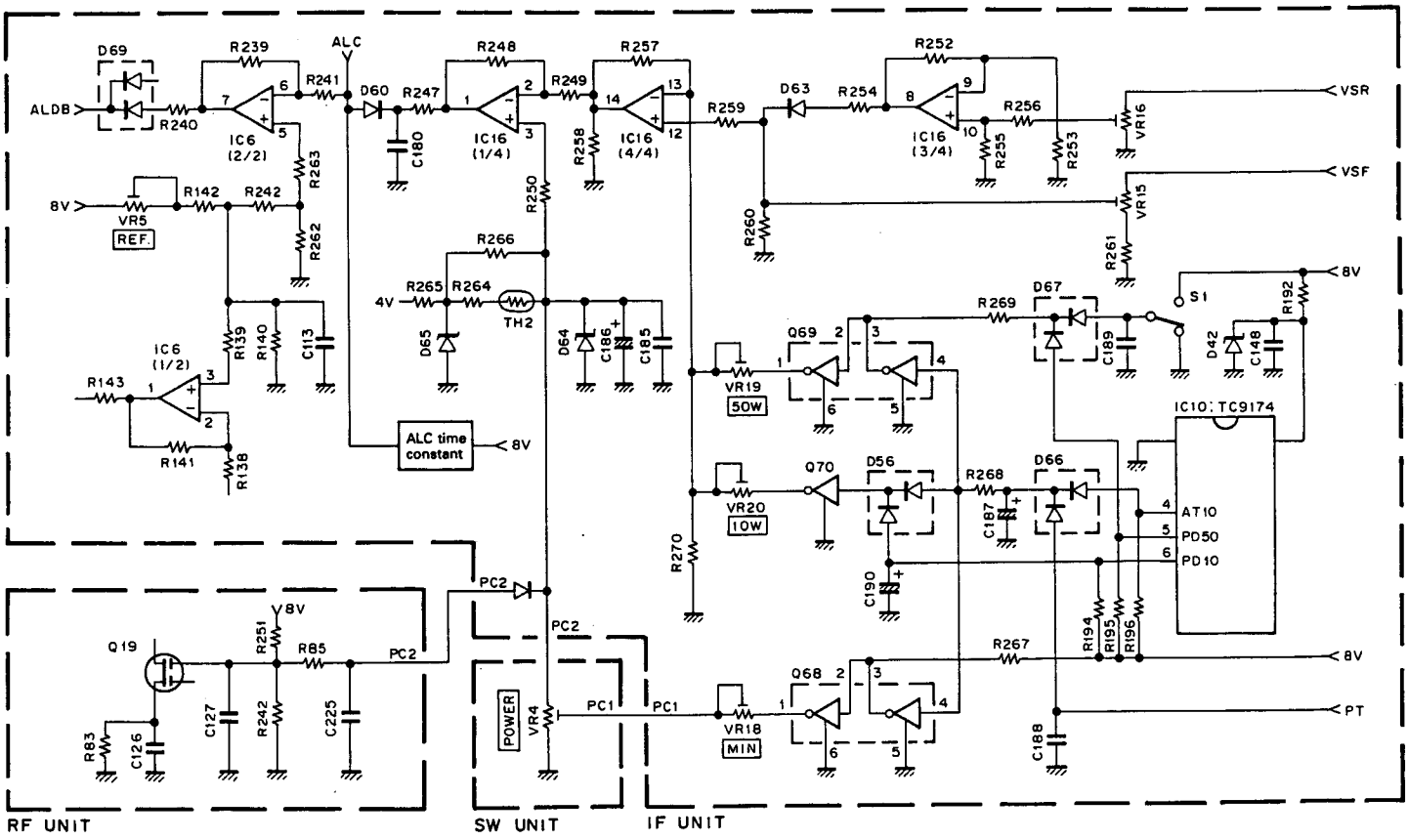

Fig. 14 ALC power control circuit

CIRCUIT DESCRIPTION

2) Power control circuit and power settings

The power needs to be set to 100W, 50W for AT-TUNE (TS-450S only) mobile operation, and 50W for the 28MHz band. The power is set by presetting the gain of non-reversing amplifier IC16 (4/4).

The presetting for a 100W model is determined by the fixed resistance of R270 and R257.

For 50W, 28MHz-band and 50W, 50MHz-band (TS-690S only) mobile operation, the signal at PD50 (pin 5) of IC10 (TC9174F) of the IF unit or S1 is turned on by a signal from the microcomputer, and pin 2 (base) of Q69 is made high. Thus, VR19 (50W) is connected to R270 in parallel, and the gain of IC16 (4/4) is increased.

In AT-TUNE operation (for the TS-450S only), the signal from AT10 (pin 4) of IC10 is made high by a signal from the microprocessor, pin 4 (base) of Q68 and pin 4 (base) of Q69 are turned on, and VR18 and VR19 are disconnected. Q70 is turned on, VR20 and R270 are connected in parallel, and the gain is determined to keep the power at 10W regardless of the position of power control potentiometer (SW unit D/5) VR4.

3) VSWR protection circuit

If the VSWR of the antenna is low, or if there is a large reflected wave during operation of the auto antenna tuner, it is detected by the filter unit, the signal is input to the VSR of IF unit CN8, is amplified by IC16 (3/4), and the ALC voltage is decreased to protect against the VSWR.

4) Temperature protection circuit

The temperature protection circuit operates, about 10V is applied to PT of IF unit CN5, and the power is reduced to 10W, as with AT-TUNE.

5) ALC meter circuit and adjustment

The reference voltage of the ALC meter circuit is generated by dividing the reference voltage of the signal-strength meter with resistors. The reference voltage is applied to the + pin (pin 5) of reversing amplifier IC6 (2/2) of the IF unit, and the ALC voltage is applied to the – pin (pin 6). The output signal from pin 7 is input to the digital unit as the ALDB signal, is operated on, and drives the meter. The meter is adjusted by matching two points, the maximum ALC zone and full scale, in adjustment mode 13 with respect to the beginning of ALC.

Standby Control Timing

Standby control and timing are handled by the IF unit (X48-3090-XX). The following control signals are used:

SS : Standby switch. Active low.
KEY : Keying signal from the keyer. Active low.
TXI : Transmission inhibit signal from the microprocessor. Low when transmission is inhibited.
PKS : Standby signal from the data communication terminal. Active low.

The control output signals are as follows:

TXB : 8V during transmission
RXB : 8V during reception. Reversal of TXB.
CKY : Keying output signal. Active high.
RBC : Receive control signal. Active low.

1) Manual standby (except CW)

- **Reception → Transmission**

When the standby switch is pressed and the SS line is grounded, Q52 is turned on. If pin 12 (TXI) of IC11 is high and transmission is possible, analog switch IC11 (4/4) is turned on. The signal is input to pin 8 of the BK-IN module (X59-3930-00), passes through D3 in the module, is input to pin 2 of the TRX module (X59-3680-01) from pin 3 of the module via R205, passes through the internal switch circuit, and TXB is output from pin 5. When TXB is high, RXB is low.

CIRCUIT DESCRIPTION

- **CKY generation**

Since CWB (8V in CW mode) is 0V in any mode other than CW, Q51 is turned off, pin 6 of IC11 goes high, and IC11 (3/4) is turned on. The signal passes through D46, and if pin 13 (TXI) is high and transmission is possible, the signal passes through D45, R200, and pin 6 of the BK-IN module (X59-3870-00), and is input to pin 2 of IC3 in the module.

The high output signal from pin 1 of IC11 is input to pin 5 of the delay module (X59-3860-00), and pin 12 of the IC1 one-shot multi in the module goes high. The $\overline{Q}$ output from pin 9 of IC1 is low for 12.5ms, then goes high. The $\overline{Q}$ output is input to pin 1 of IC3 in the module via pin 4 of the delay module and pin 5 of the BK-IN module. Pin 4 of IC3 goes low 12.5ms after the standby switch is pressed. The signal is input to pin 13 of inverter IC1 (e/6), is inverted by the inverter, output from pin 12, and output from pin 7 of the BK-IN module as the CKY signal.

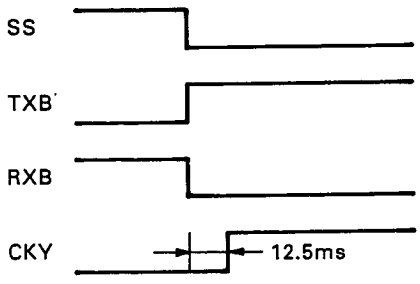

Fig. 15 CKY generation

- **Transmission → Reception**

When the standby switch is turned off, Q52 is turned off, and pin 8 of the BK-IN module goes low. Because of the time constant circuit consisting of R1 and C1 between pin 10 of IC1 (a/6) and pin 9 of IC1 (b/6), IC1 b/6 goes low 5ms after the standby switch is turned off. Pin 2 of the TRX module goes low via pin diode D3 in the module, pin 3 of the module, and R205. So, TXB goes low 5ms after the standby switch is turned off, and RXB goes high.

- **CKY down**

When the standby switch is turned off, pin 1 of IC11 goes low and pin 6 of the BK-IN module goes low. So CKY goes low when the standby switch is turned off.

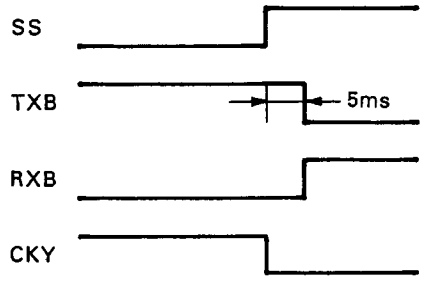

Fig. 16 CKY down

- **RBC generation**

When pin 3 of the BK-IN module goes low, pin 3 of IC1 (c/6) and pin 1 of IC1 (d/6) in the module go low. Because of the time constant circuit consisting of R3 and C3, the output from pin 4 of IC2 goes low 35ms after the standby switch is turned off, producing the RBC signal.

The RBC signal is applied to the base of the switching transistor Q1 of the IF unit, which grounds the 455kHz receive IF signal.

- **PLL, DDS data and transmit/receive timing signal**

It takes 12.5ms from the standby switch being grounded until CKY is generated. It takes 20ms from RXB going high until RBC goes low. The PLL and DDS data from the microprocessor are switched, and the diode switch and analog switch are switched during that time to assure stable transmission and reception.

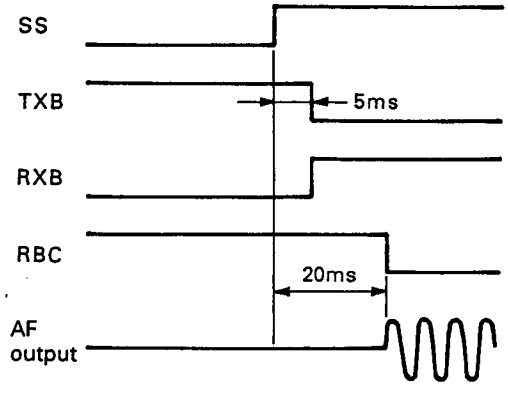

Fig. 17 PLL, DDS data and transmit/receive timing signal

 TS-450S/690S

CIRCUIT DESCRIPTION

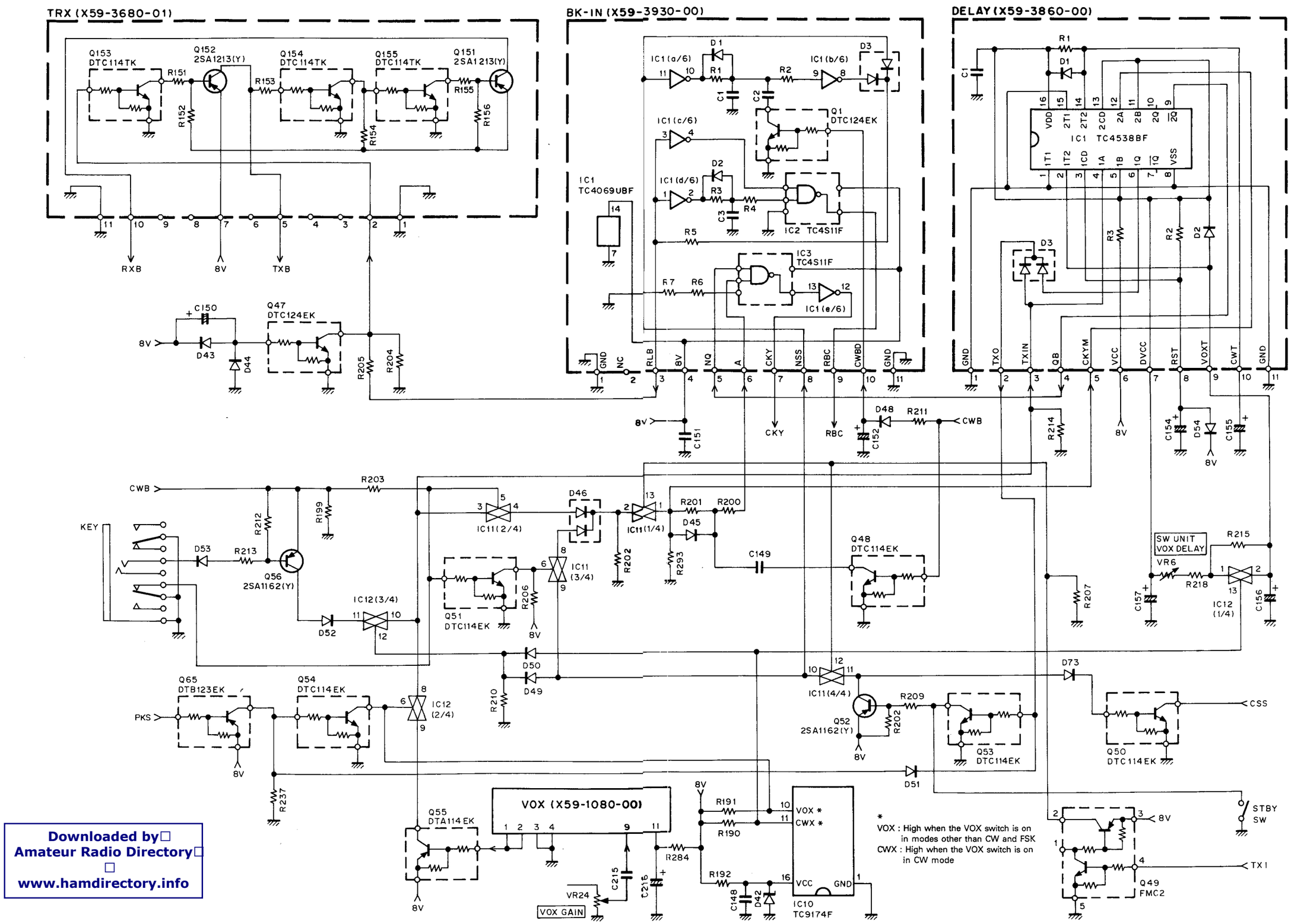

Fig. 18 Standby timing circuit

There is no page 24, as the schematic on page 23 is 2 pages large.

CIRCUIT DESCRIPTION

2) Full break-in operation timing

- **TXB generation by key down**

When a key is plugged into the jack, and the key pressed, Q56 is turned on, and the signal passes through D52. Since the VOX switch is also turned on during full break-in, pin 11 of IC10 goes high, the signal passes through D50, pin 12 of IC12 (3/4) goes high, and the ON signal is input to pin 3 of the delay module. The signal is split and sent to D3 in the module and pin 4 of IC1. Since the delay VR on the front panel is turned fully counterclockwise, the time constant generated by one-shot multi IC1 is very small. The signal goes via D3 and is input to pin 2 of the module, Q53 turns on, the SS line goes low, and Q53 turns on.

If the TXI signal is high, the high signal passes through IC11 (4/4), is input to enters pin 8 of the BK-IN module, and is output from pin 3, as in manual standby. Pin 2 of the module goes high, and TXB is generated.

- **CKY generation**

When a key is plugged into the jack, the switch in the jack is closed, Q51 turns on, pin 6 of IC11 (3/4) goes low, and pin 5 of IC11 (2/4) goes high.

When the key is pressed, the collector of Q56 goes high, and the signal passes through D52, IC12 (3/4), IC11 (2/4), D46, and IC11 (1/4). A high signal is input to pin 6 of the BK-IN module through D45 and R200. The CKY signal rises 12.5ms after the key is pressed, in the same way as for CKY generation at manual standby.

- **Key up**

When the key is up, pin 8 of the BK-IN module goes low, and pin 2 also goes low. TXB goes low, and RXB goes high. One difference from manual standby, except for CW, is that since, in CW mode, Q1 in the module is turned on through pin 10 of the BK-IN module (comprising R211 and D48) from CWB, C2 is connected to C1 in parallel, and the TXB delay time when the key is up is 12.5ms.

For the output signal from IC11 (1/4) for producing the CKY signal, there is a switch circuit consisting of C149 and Q48 between D45 and R200. In CW mode, Q74 is turned on, and C230 enters the output side of R317 to produce the delay time for key up. The time constant generated by the CR circuit provides a correction of about 13ms when the key is up by raising the CKY waveform 12.5ms after the key is down to prevent deterioration of the waveform.

- **RXB and RBC generation**

TXB goes low, and RXB goes high, 12.5ms after the key is up. RBC operates the receive signal line with a delay of 50ms in the same way as for the manual standby.

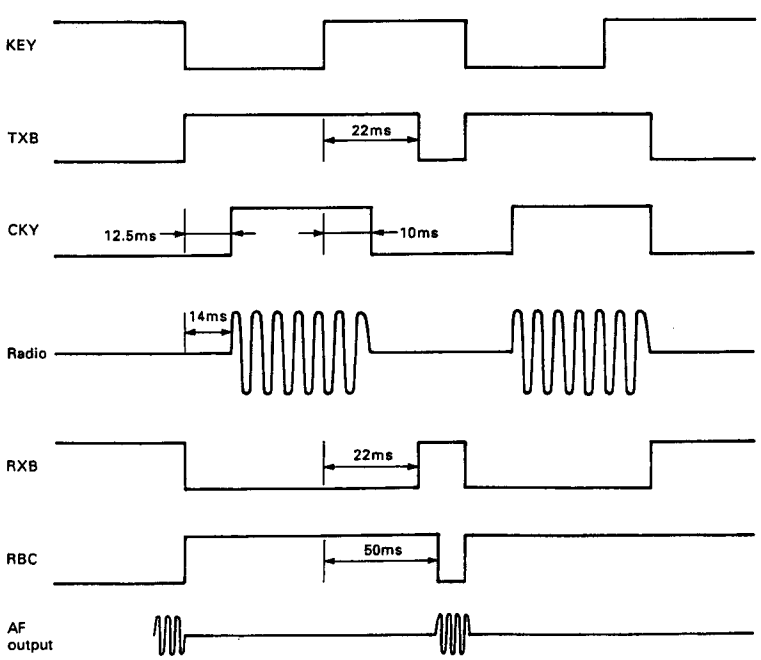

Fig. 19

CIRCUIT DESCRIPTION

3) Timing for semi-break-in operation

- **TXB generation by key down**

When the key is down, the signal follows the same route as for full break-in. The high signal input to pin 3 of the delay module makes pin 4 of one-shot multi IC1 in the module high, and a high signal is output from pin 6 for a certain time. The time is determined by analog switch IC12 (1/4) in CW mode, so the one-shot multi IC of the delay module is controlled by chemical capacitor C156 in the IF unit and the time-constant circuit of delay VR and R218 in the front panel.

- **CKY generation**

The CKY signal rises after a delay of 12.5ms in the same way as for full break-in; after the key is up, it rises after a delay of 13ms.

4) Timing during VOX operation

The audio signal from the microphone is input to pin 4 of CN6 of the IF unit, and is amplified by Q73. The gain is controlled by the VOX VR (VR24), and the resulting signal goes to pin 9 of the VOX module (X59-1080-00). The output from pins 1 and 2 turns Q55 on. If the VOX switch is pressed, analog switch IC12 (2/4) turns on, and a high signal goes to pin 3 of the delay module. The high signal with time constant turns Q53 on, and grounds the SS line. Subsequent operations are the same as for manual standby.

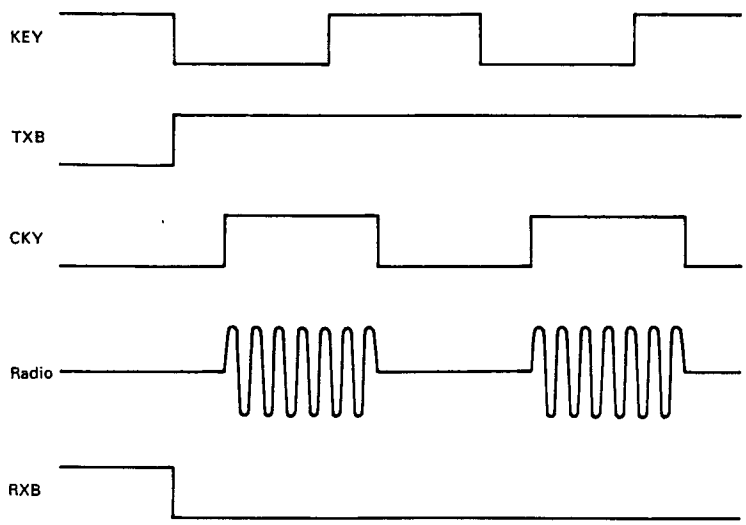

Fig. 20

50MHz 50W Final Unit

This unit comprises a power amplifier circuit that amplifies the 50MHz band signal, a bias circuit that provides bias to that circuit, and a fan control circuit that drives the cooling fan motor.

The power amplifier circuit is a class AB push-pull circuit, and amplifies the signal input from the 50MHz 50W final unit to up to about 80W. Since final transistors Q1 and Q2 are 2SC2879 types for the HF band, the 54MHz gain is low compared with the 50MHz, but it is corrected by C3 and C4. If the values of C3 and C4 are too small, the power decreases, and if they are too large, oscillation tends to occur at 30MHz. The core material of the input and output transformers is 6B2 with a low μ so that the impedance is converted with little loss.

Q3 provides the bias current for final transistors Q1 and Q2. The bias circuit around Q3 is the same as that used for the TS-680, and the bias current is adjusted by VR1.

The fan control circuit operates as follows. If transmission command signal CN2 50T goes high (about 8V), Q4 turns on, about 7V is applied to the cooling fan motor, and the motor runs. If the radiator temperature exceeds about 50°C, the fan module turns on, about 9V is applied to the cooling fan motor, and the motor runs faster. The fan keeps running until the radiator temperature falls, even if receive mode is entered. If the radiator temperature exceeds about 90°C due to continuous transmission, CN2 50PT goes high (about 10V), and the ALC reduces the transmission power to about 10W.

CIRCUIT DESCRIPTION

AT Unit

1) Auto Antenna Tuner

When the AUTO/THRU switch is set to AUTO, ATA goes high, AUTO/THRU switching relay K1 closes, and the AT is inserted to prepare for tuning. If variable capacitors VC101 and VC102 are not at their preset positions, they are set to these positions, and AT TUNE operation and actual transmission start after the presetting ends.

When AT TUNE is turned on, the CW mode is entered, and the transmission output becomes about 10W. If the VSWR is less than 1.2, tuning is regarded as complete, and the AT TUNE operation stops. If the VSWR is greater than 1.2, the duty cycle of the motor control pulse (described later) is controlled according to the VSWR.

The motor speed is determined by the microprocessor, and the direction is determined by the phase comparator (IC1) and amplitude comparator (IC6) if the APRE is low, and by the microprocessor if the APRE is high.

- **Auto tuning mode**

The transmitter power from the final unit passes via the filter unit through current/voltage detection transformers L1 and L2, which have toroidal cores. The current and voltage components detected here are rectified by a waveform rectification circuit consisting of D4, Q1, D7, and Q2, and are then phase-compared by IC1 (SN74S74NS). The output signals ($\overline{Q}$ and Q) from pins 8 and 9 of IC1 passes from IC2 (TC4066BF) through the switch , and are applied to the motor drive IC, IC4 (BA6109U2). Variable capacitor VC101 is turned by motor M1 so that the phase difference of the voltage and current components decreases.

The voltage and current components detected by L1 and L2 are rectified by germanium diodes D1 and D2 (1N60), and are applied to voltage comparison circuit IC6 (NJM2903M) as the amplitude component of the signal. The comparator output passes from IC3 (TC4066BF) through the switch. Motor M2 is driven by another motor drive IC, IC5 (BA6109U2), which turns variable capacitor VC102 in the direction that decreases the amplitude difference of the voltage and current components.

Thus, variable capacitor VC101 adjusts the capacitance of the circuit so that the current and voltage phases match, and variable capacitor VC102 adjusts the resistance of the circuit so that the current and voltage amplitude difference decreases. If the phases match and the amplitude difference is zero, the SWR is 1 : 1.

The speed of motors M1 and M2 is determined by the duty cycle of the pulse input to pin 8 of IC4 and IC5. It is controlled according to the VSWR calculated by the CPU in the digital unit and the speed corresponding to preset or manual antenna tuning.

Pulse signal SPED from the digital unit passes through Q5 (DTC114EK), and is amplified by Q4 (2SA1204) to produce a control pulse input to IC4 and IC5.

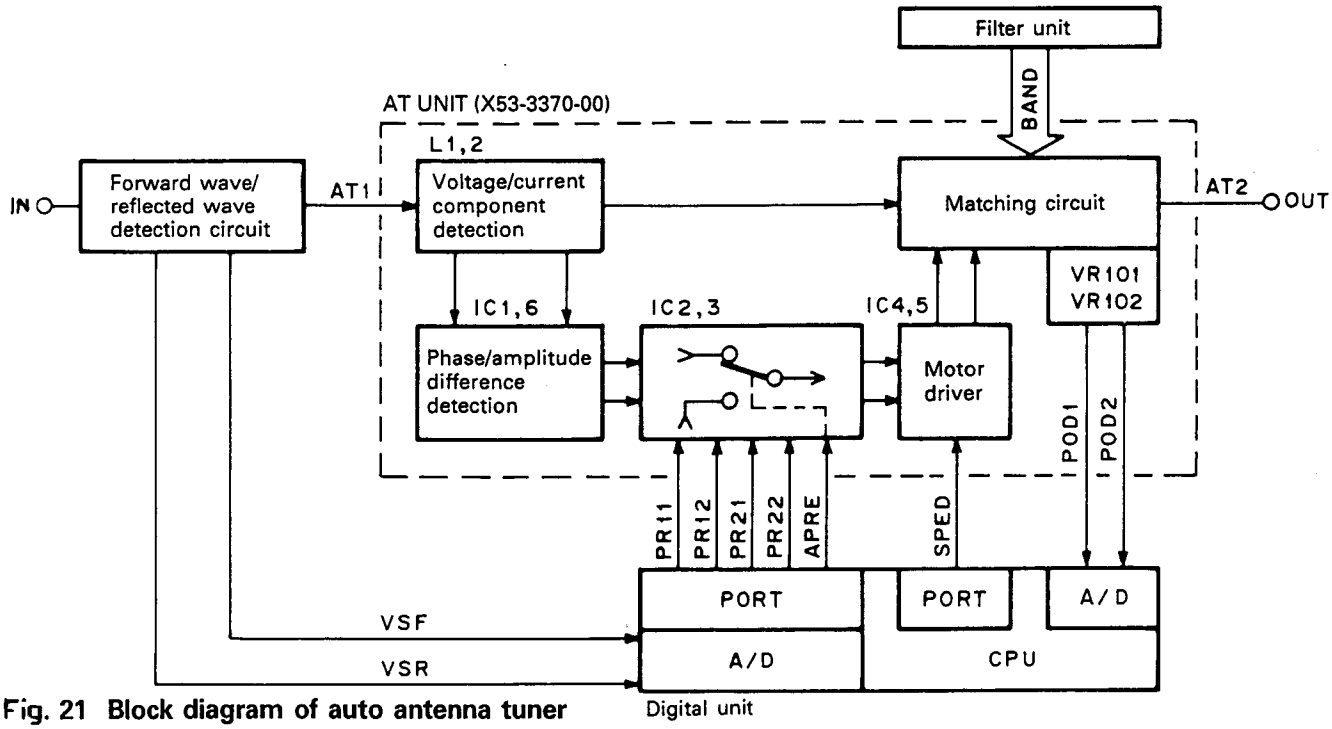

Fig. 21 Block diagram of auto antenna tuner

CIRCUIT DESCRIPTION

With this control, when the SWR is 3 : 1 or more, the motor runs fast since the duty cycle of the motor drive voltage pulse is 100%. When the SWR is 2 : 1, the duty cycle becomes about 50%, and the motor runs slowly.

The matching circuit is a T type. The tap position from 3.5 to 30MHz is controlled by six relays, K101 to K106.

Position detection potentiometers VR101 and VR102 are linked to the spindles of variable capacitors VC101 and VC102 with a gear ratio of 1 : 1. Voltages of 0 to 5V (POD1 and POD2) are produced according to the positions of the variable capacitors. This position data is input to the CPU through the A/D converter by the digital unit, and is used as the reference voltage in the feedback control system, which is used for preset antenna tuning and manual antenna tuning. The same signal is also used for preset data and to signal the completion of antenna tuning.

The potentiometers used here are not ones that rotate through 360 degrees. Since the TS-450S limits the rotation angle of each potentiometer, the rotation range is from the minimum capacitance to the maximum capacitance, plus a little extra for headroom.

Through this control, like preset antenna tuning, which will be described later, POD1 and POD2 are monitored by the microprocessor. If the lower limit voltage of 0.6V or the upper limit voltage of 4.2V is reached, the microprocessor recognizes that a variable capacitor is close to one of its limits. To return the voltage to the opposite side, APRE is switched high. For VC101, if the voltage is close to the lower limit with respect to PRE1, the voltage near the upper limit is output. If the voltage is close to the upper limit with respect to PRE1, the voltage near the lower limit is output.

The other variable capacitor, VC102, should be fixed. If the variable capacitor voltage exceeds the specified limit, the variable capacitor is returned to the opposite limit. The other variable capacitor remains in the same position.

The motor direction is determined by the CPU, unless auto antenna tuning is performed with high APRE. The logic of PR11 to PR22 is the same as that of IC4 and IC5. The signal output from the digital unit passes through IC2 and IC3, and is input to IC4 and IC5.

		PR11	PR12	PR21	PR22
Motor 1	Normal rotation	H	L	–	–
	Reverse rotation	L	H	–	–
Motor 2	Normal rotation	–	–	H	L
	Reverse rotation	–	–	L	H

- **Manual antenna tuning**

Hold down the M.IN key and switch the power on. Select menu number 31 with the click encoder, turn the display off with the DOWN key, and press the CLR key to return to the normal mode. The transceiver is now ready for manual antenna tuning.

The main encoder controls VC101, and the sub-encoder controls VC102.

- **Preset antenna tuning**

When auto or manual antenna tuning ends, the position of the variable capacitors is stored in memory by the microprocessor as preset data for that band.

When the band is changed back after tuning is done in another band, APRE goes high, the motors are controlled by the microprocessor, and preset antenna tuning takes place. During preset antenna tuning, auto antenna tuning and transmission are inhibited even if the AT TUNE switch is pressed or the transceiver is ready to transmit.

The initial preset data when the microprocessor is reset includes standard data for a 50Ω load on each band.

CIRCUIT DESCRIPTION

Digital Control Unit

1) Digital control

The TS-690S/450S digital control circuit has a multiple chip configuration, and comprises a CPU (μPD 78213GJ), a 32K ROM, an 8K RAM, two I/O expanders, and an EEPROM. This circuit controls all the units.

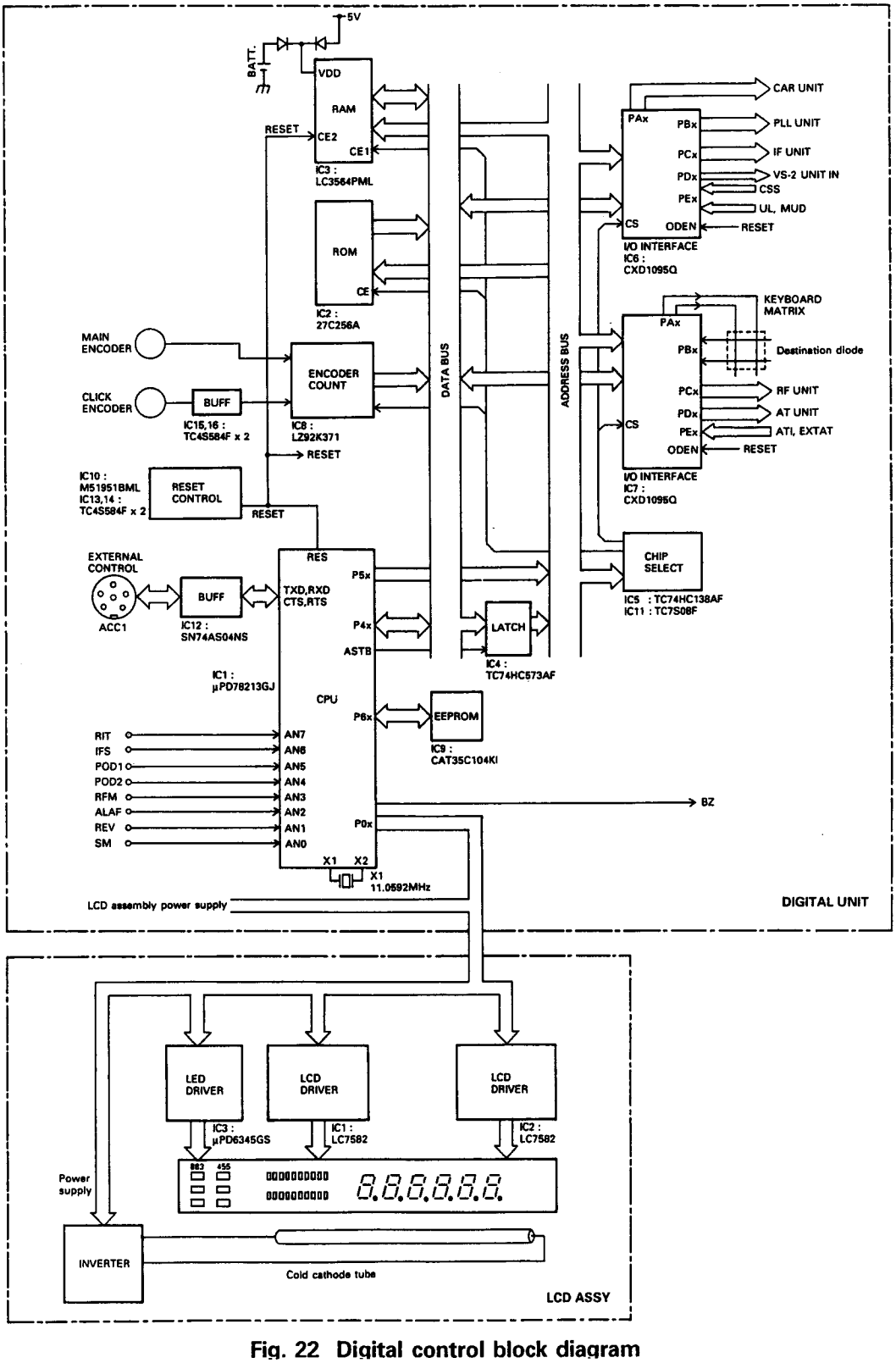

Fig. 22 Digital control block diagram

CIRCUIT DESCRIPTION

2) Address control and memory map

AD0 to AD7 of the CPU are multiplexed low-order address and data bus lines, and A8 to A15 are the high-order address lines. The multiplexed low-order address signals are separated from the data signals by IC4 (74HC573A) and the ASTB signal. The high-order address signals of A12 to A15 are converted to a chip select signal for each IC by IC5 (74HC138A) to access each port.

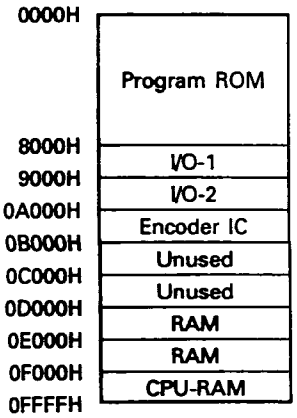

Fig. 24 Memory map

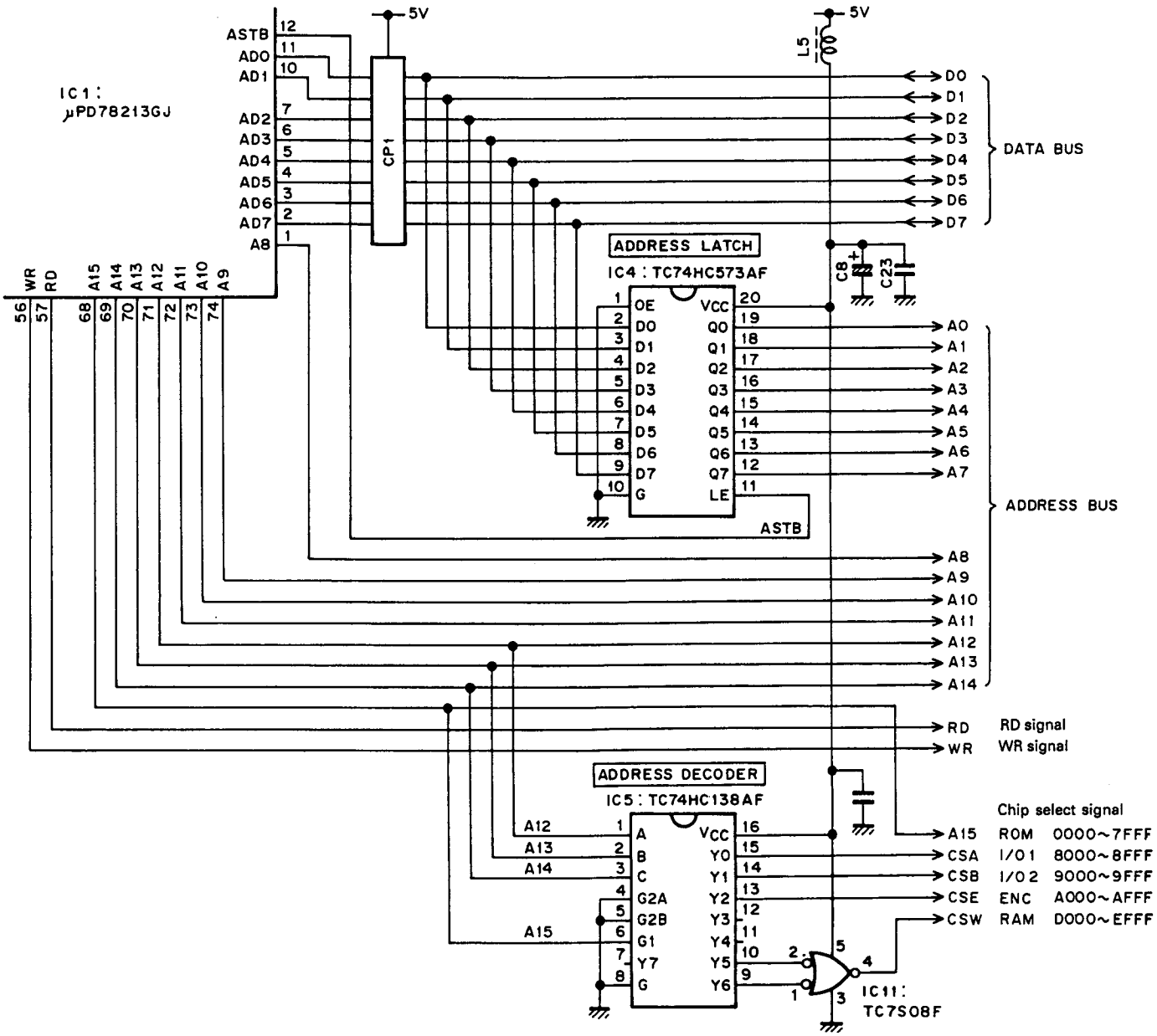

Fig. 23 Address separation circuit

CIRCUIT DESCRIPTION

3) Reset circuit

The power supply voltage (5V line) is always monitored by IC10 (M51951BML) to prevent destruction of memory data by the power being switched off or by momentary power failure. If the 5V line voltage is low, the IC stops the CPU immediately, inhibits writing to memory (RAM), and backs up the RAM with a battery. When the power supply voltage becomes normal, the CPU and I/O are initialized after the time constant set by R1 and C13, and operation resumes.

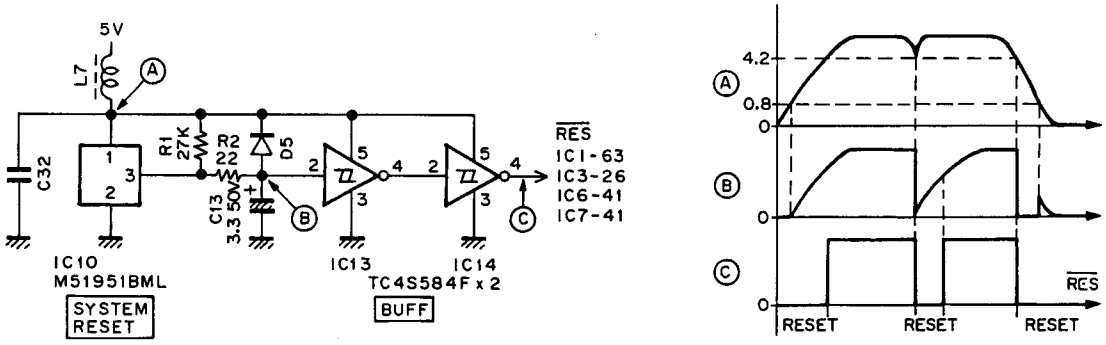

Fig. 25 Reset circuit

4) Encoder circuit

The rotation pulses from the main magnetic encoder and the click encoder are input to IC8 (LZ92K371), and read by the CPU via the data bus. IC8 multiplies the main encoder rotation pulse by four, and outputs the resulting signal and rotational direction; it multiplies the click encoder rotation pulse by two, and outputs the resulting subencoder signal and rotational direction. IC15 and IC16 (TC4S574F) rectify the waveform of the click encoder pulses.

5) Display Circuit

The TS-690S/450S uses a transmission-type display with a negative LCD and a cold cathode tube. The LCD is driven by the LCD driver (LC7582 x 2) with a duty cycle of 1/2. The IF filter display is a yellow LED, and is driven by the LED driver (µPD6345GS). Display data is input to the three drive ICs as serial data, serial clock, and enable signals.

6) PLL and DDS control circuit

The TS-690S/450S has two PLLs and two DDSs. The main CPU outputs serial frequency data to the PLLs and DDSs according to the displayed frequency. Two PLL ICs output unlock data signals. If one of the PLLs should unlock, the display indicates that the PLL is unlocked.

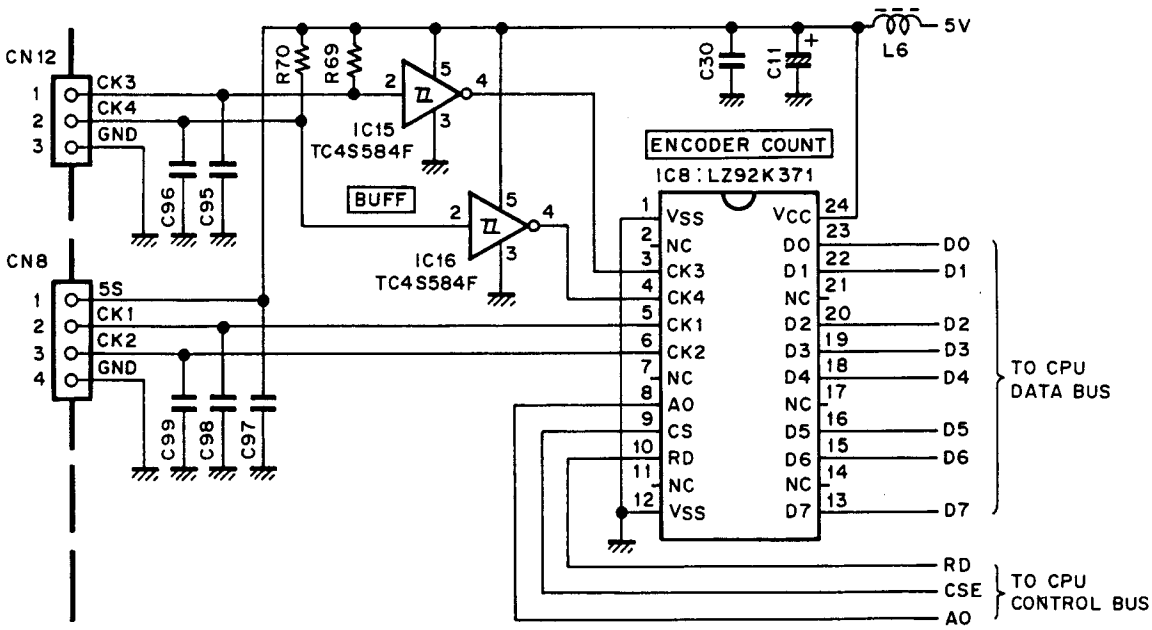

Fig. 26 Encoder circuit

CIRCUIT DESCRIPTION

7) IF unit control signal

The CPU outputs the mode signal, 455kHz IF filter select signal, and power-down signal to the IF unit, and receives the signal from each meter, standby switch signal to display data on the meter and perform transmission. The signal is output from the CPU via a serial-to-parallel converter (TC9174F) and a ribbon cable for easy connection.

8) RF unit control signal

The receive BPF select signal, transmit LPF select signal, and 8.83MHz IF filter select signal are input to the RF unit as serial data. The AT-300 control signal and blanking signal are output from the RF unit.

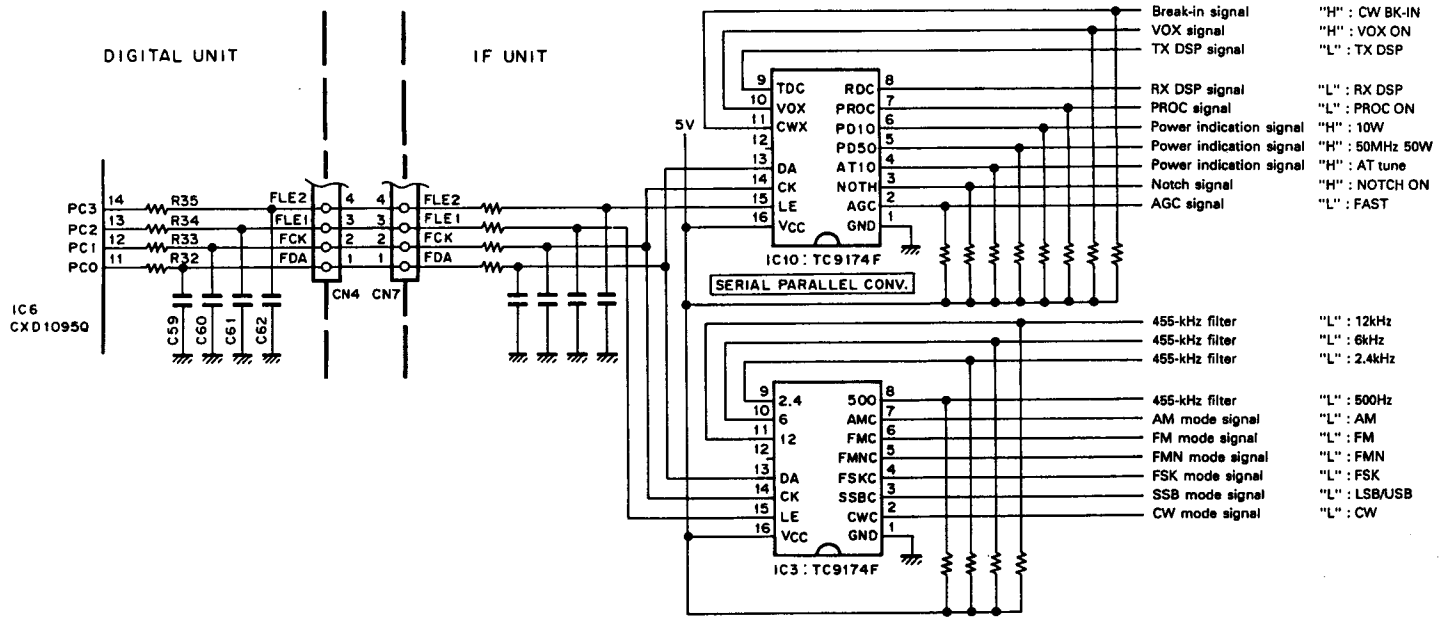

Fig. 27 IF unit serial-to-parallel converter

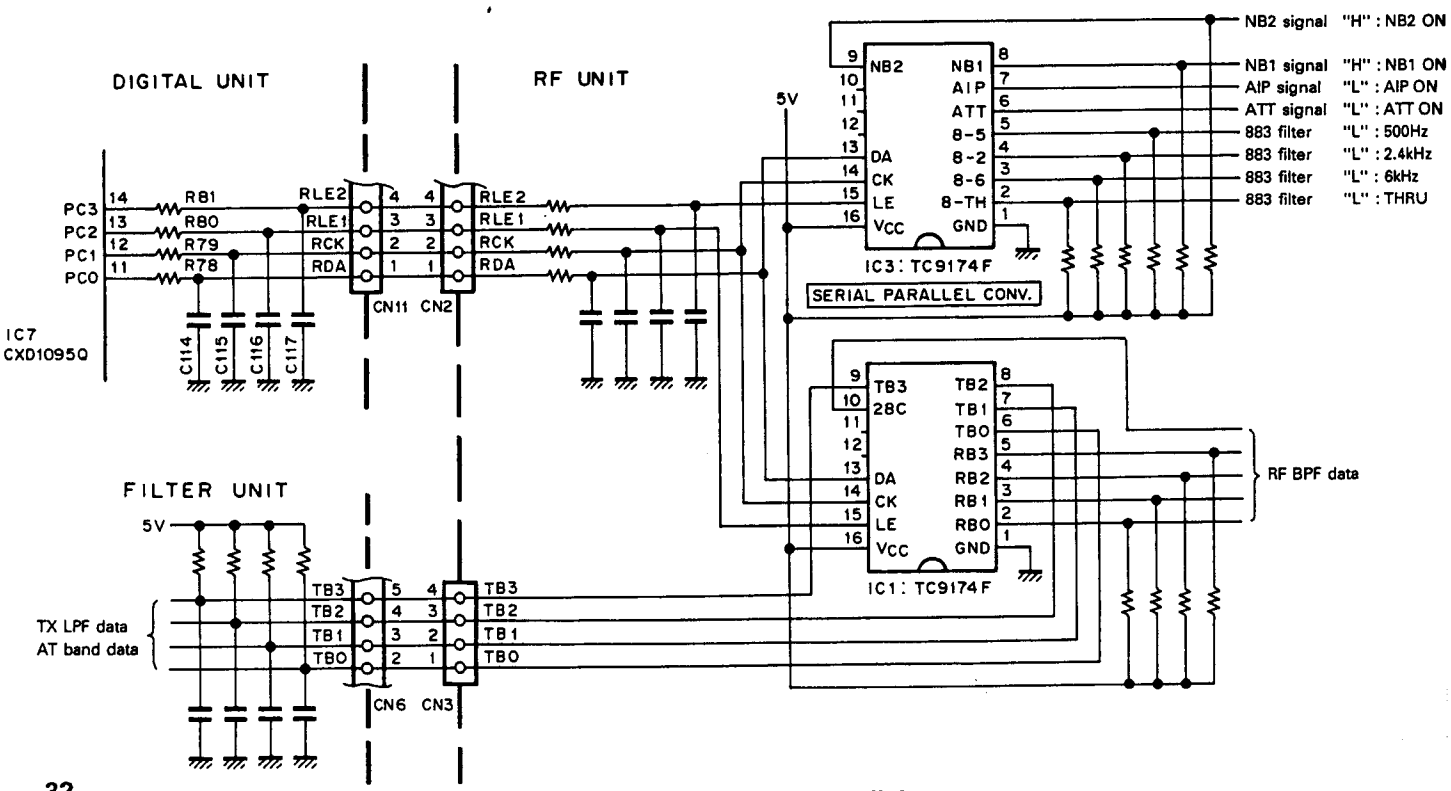

Fig. 28 RF unit serial-to-parallel converter

CIRCUIT DESCRIPTION

9) AT unit control signal

For the preset AT, the CPU controls the rotational direction and speed of the variable capacitor drive motors so that they stop at the preset position according to the AT select data from the option select menu, AT-450 installation signal, variable capacitor position data, and preset position data. The tap signal from the tuning circuit is synthesized from the transmit LPF select signal from the filter unit.

The AT-300 control signal handshakes the AT-300 in both directions to perform tuning.

The AT-450 does not tune in the 1.9MHz and 50MHz bands. The AT-300 does not tune in the 50MHz band, so take care when connecting a 50MHz-band antenna.

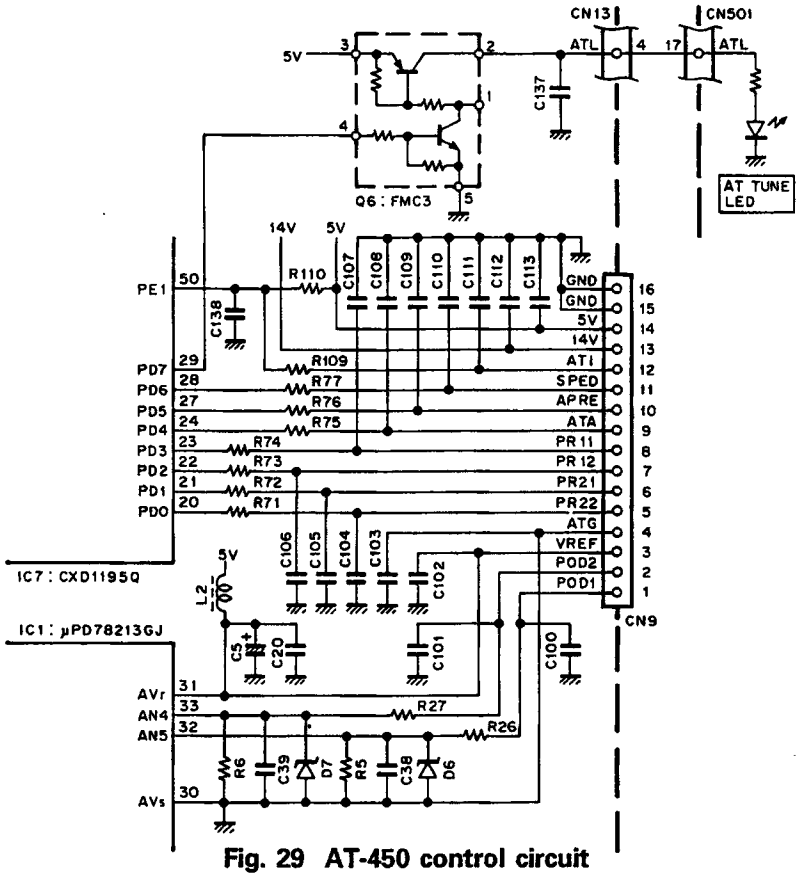

Fig. 29 AT-450 control circuit

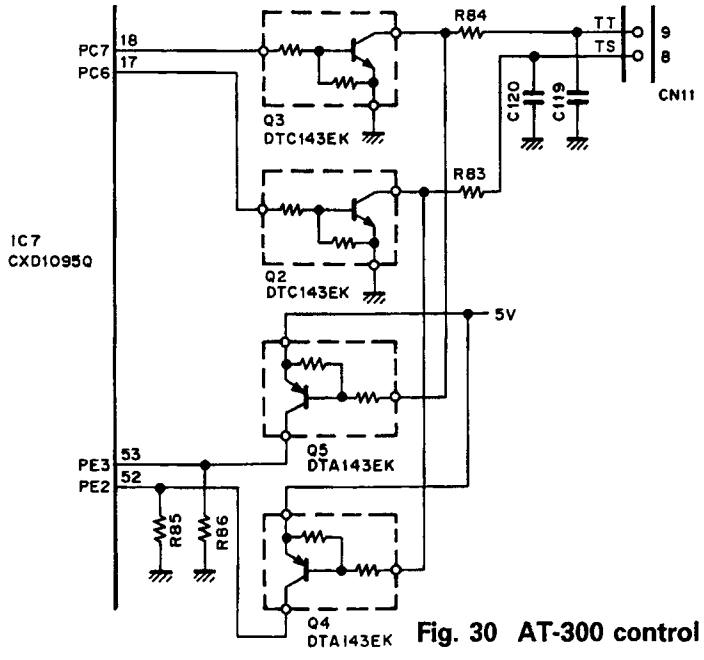

Fig. 30 AT-300 control circuit

CIRCUIT DESCRIPTION

10) Serial interface

The CPU contains an asynchronous serial interface to support TTL level serial communication. The TS-690S/450S uses the serial port to communicate with a personal computer, control the DSP-100, and transfer data between two communication devices. Data is TTL level with one start bit, 8 data bits, two stop bits, and 4800-bps transmission speed.

11) Key scan

Ports S0 to S5 and K0 to K6 form a keyboard matrix. When the switch at an intersection in the matrix is pressed, ports K0 to K6 go low. Thus, which switch has been pressed can be detected by software. The keys are debounced by software.

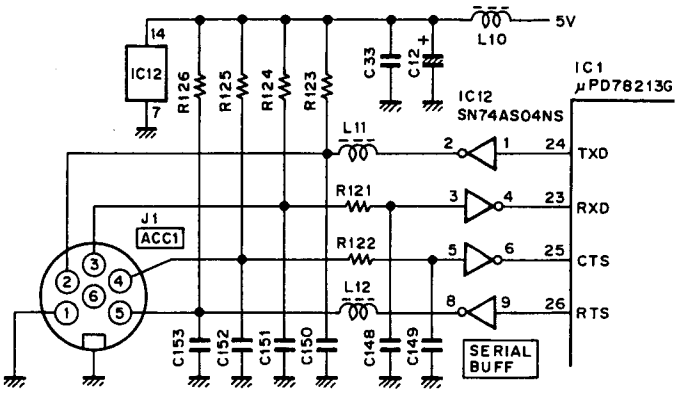

Fig. 31 Serial interface circuit

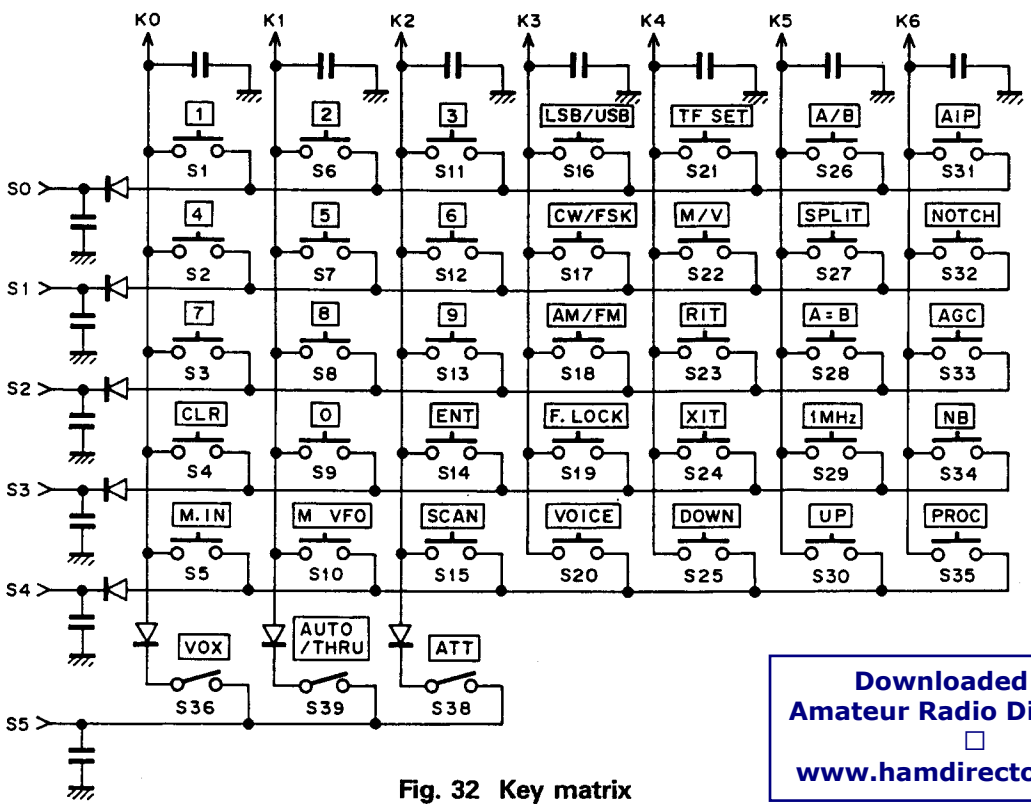

Fig. 32 Key matrix

12) Beep

The beep signal is generated by the timer in the CPU. The enable data (beep on/off, mode beep, warning Morse) of the extended menu is recognized, and the necessary code output. The short point length is about 40ms, the long, about 120ms. The oscillation frequency is about 1.2kHz.

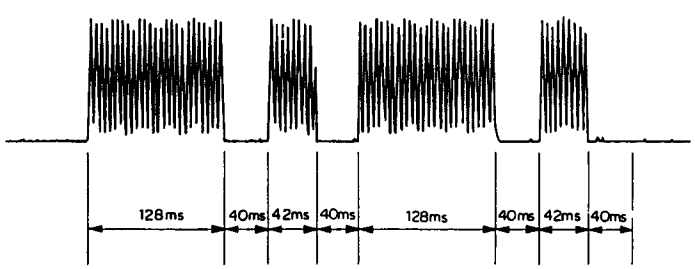

Fig. 33 Output waveform of Morse code C

CIRCUIT DESCRIPTION

13) EEPROM

To prevent backup problems, the minimum necessary adjustment data is stored in EEPROM. The EEPROM is accessed with 11-bit serial data, and data can be written to and read from the EEPROM.

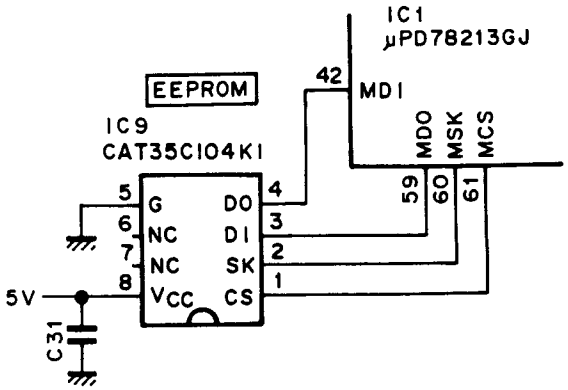

Fig. 34 EEPROM circuit

14) Analog Input

The CPU incorporates an analog-to-digital (A/D) converter, so analog signals can be input directly. A protection resistor, zener diode, and pascon are connected to the input pins of the converter. Incoming analog signals are digitized for display on the meter and to drive the AT motor.

Port name	Signal name	Details
AN0	SM	S-meter voltage (during reception only)
AN1	REV	Reflected wave voltage (during transmission only)
AN2	ALDB	AF meter voltage (during reception only), ALC meter voltage (during transmission only)
AN3	RFM	Power meter voltage (during transmission only)
AN4	POD2	AT variable capacitor 2 position voltage
AN5	POD1	AT variable capacitor 1 position voltage
AN6	IFS	IF-shift VR position voltage
AN7	RIT	RIT VR position voltage

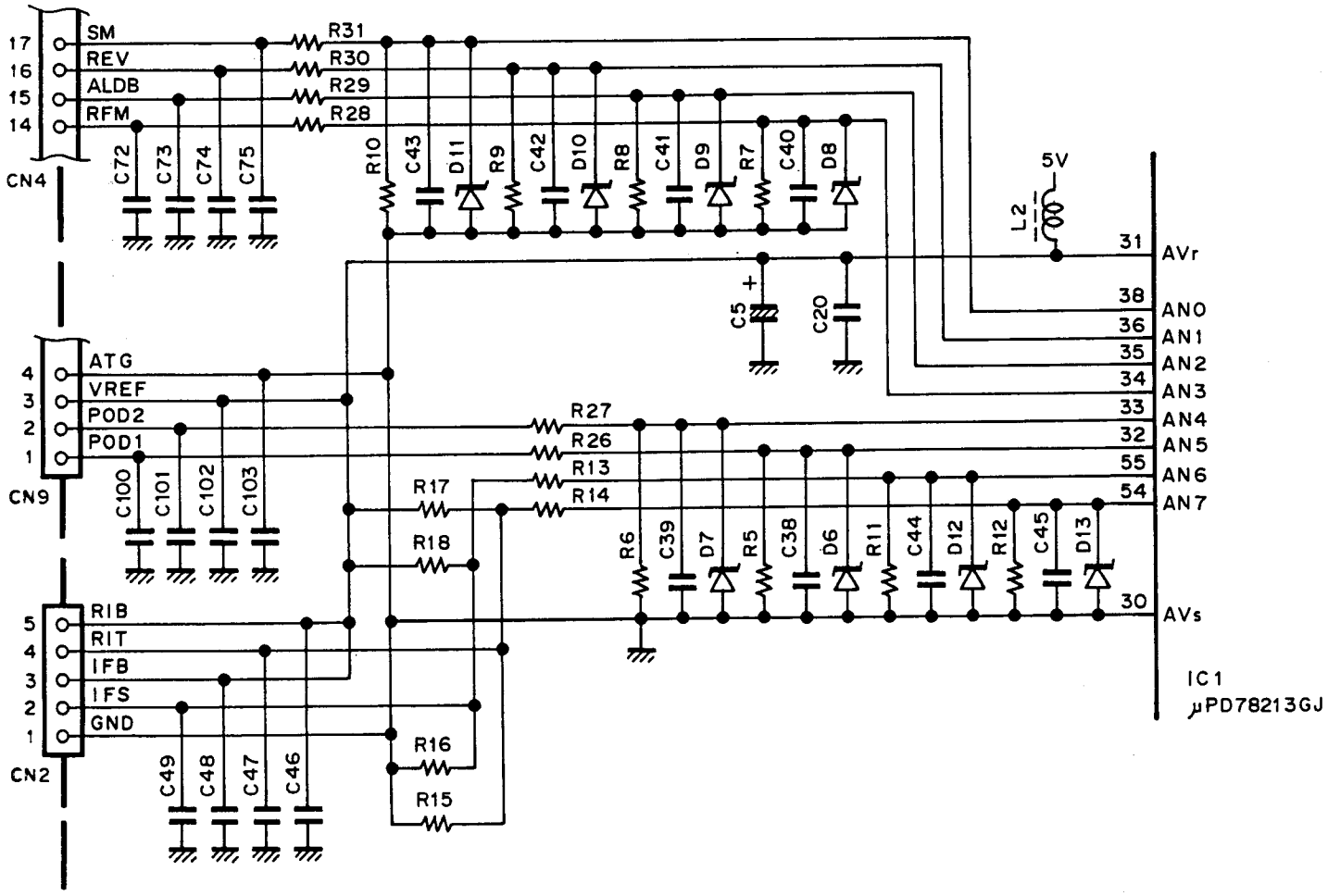

Fig. 35 Analog input circuit

CIRCUIT DESCRIPTION

15) Band data 1

Frequency (MHz)	RX BPF DATA					TX LPF DATA				VCO DATA				
	28C	RB3	RB2	RB1	RB0	TB3	TB2	TB1	TB0	BCH	VB3	VB2	VB1	VB0
0.030000~ 0.499999	1	0	0	0	0	0	1	0	0	1	0	0	0	1
0.500000~ 0.999999	1	0	0	0	1	0	1	0	0	1	0	0	0	1
1.000000~ 1.619999*1	1	0	0	0	1	0	1	0	0	1	0	0	0	1
1.620000*2~1.999999	1	0	0	1	0	0	1	0	0	1	0	0	0	1
2.000000~ 2.499999	1	0	0	1	0	0	1	0	0	1	0	0	0	1
2.500000~ 2.999999	1	0	0	1	1	0	1	1	0	1	0	0	0	1
3.000000~ 3.499999	1	0	0	1	1	0	1	1	0	1	0	0	0	1
3.500000~ 3.999999	1	0	0	1	1	0	1	1	0	1	0	0	0	1
4.000000~ 4.499999	1	0	1	0	0	0	0	1	0	1	0	0	0	1
4.500000~ 4.999999	1	0	1	0	0	0	0	1	0	1	0	0	0	1
5.000000~ 5.499999	1	0	1	0	0	0	0	1	0	1	0	0	0	1
5.500000~ 5.999999	1	0	1	0	0	0	0	1	0	1	0	0	0	1
6.000000~ 6.499999	1	0	1	0	0	0	0	1	0	1	0	0	0	1
6.500000~ 6.999999	1	0	1	0	0	0	0	1	0	1	0	0	0	1
7.000000~ 7.499999	1	0	1	0	0	0	0	1	0	1	0	0	0	1
7.500000~ 7.999999	1	0	1	0	1	0	0	0	1	1	0	0	0	1
8.000000~ 8.499999	1	0	1	0	1	0	0	0	1	1	0	0	0	1
8.500000~ 8.999999	1	0	1	0	1	0	0	0	1	1	0	0	0	1
9.000000~ 9.499999	1	0	1	0	1	0	0	0	1	1	0	0	0	1
9.500000~ 9.999999	1	0	1	0	1	0	0	0	1	1	0	0	0	1
10.000000~10.499999	1	0	1	0	1	0	0	0	1	1	0	0	0	1
10.500000~10.999999	1	0	1	1	0	0	1	0	1	1	0	0	1	0
11.000000~11.499999	1	0	1	1	0	0	1	0	1	1	0	0	1	0
11.500000~11.999999	1	0	1	1	0	0	1	0	1	1	0	0	1	0
12.000000~12.499999	1	0	1	1	0	0	1	0	1	1	0	0	1	0
12.500000~12.999999	1	0	1	1	0	0	1	0	1	1	0	0	1	0
13.000000~13.499999	1	0	1	1	0	0	1	0	1	1	0	0	1	0
13.500000~13.999999	1	0	1	1	0	0	1	0	1	1	0	0	1	0
14.000000~14.499999	1	0	1	1	1	0	1	0	1	1	0	0	1	0
14.500000~14.999999	1	0	1	1	1	0	0	1	1	1	0	0	1	0
15.000000~15.499999	1	0	1	1	1	0	0	1	1	1	0	0	1	0
15.500000~15.999999	1	0	1	1	1	0	0	1	1	1	0	0	1	0
16.000000~16.499999	1	0	1	1	1	0	0	1	1	1	0	0	1	0
16.500000~16.999999	1	0	1	1	1	0	0	1	1	1	0	0	1	0
17.000000~17.499999	1	0	1	1	1	0	0	1	1	1	0	0	1	0
17.500000~17.999999	1	0	1	1	1	0	0	1	1	1	0	0	1	0
18.000000~18.499999	1	0	1	1	1	0	0	1	1	1	0	0	1	0
18.500000~18.999999	1	0	1	1	1	0	0	1	1	1	0	0	1	0
19.000000~19.499999	1	0	1	1	1	0	0	1	1	1	0	0	1	0
19.500000~19.999999	1	0	1	1	1	0	0	1	1	1	0	0	1	0
20.000000~20.499999	1	0	1	1	1	0	0	1	1	1	0	0	1	0
20.500000~20.999999	1	0	1	1	1	0	0	1	1	1	0	0	1	0
21.000000~21.499999	1	0	1	1	1	0	0	1	1	1	0	0	1	0
21.500000~21.999999	1	1	0	0	0	0	1	1	1	1	0	1	0	0
22.000000~22.499999	1	1	0	0	0	0	1	1	1	1	0	1	0	0
22.500000~22.999999	1	1	0	0	0	0	1	1	1	1	0	1	0	0
23.000000~23.499999	1	1	0	0	0	0	1	1	1	1	0	1	0	0
23.500000~23.999999	1	1	0	0	0	0	1	1	1	1	0	1	0	0
24.000000~24.499999	1	1	0	0	0	0	1	1	1	1	0	1	0	0

*1 : 1.704999 for K type only. *2 : 1.705000 for K type only

CIRCUIT DESCRIPTION

Frequency	RX BPF DATA					TX LPF DATA				VCO DATA				
(MHz)	28C	RB3	RB2	RB1	RB0	TB3	TB2	TB1	TB0	BCH	VB3	VB2	VB1	VB0
24.500000~24.999999	1	1	0	0	0	0	1	1	1	1	0	1	0	0
25.000000~25.499999	1	1	0	0	0	1	0	0	0	1	0	1	0	0
25.500000~25.999999	1	1	0	0	0	1	0	0	0	1	0	1	0	0
26.000000~26.499999	1	1	0	0	0	1	0	0	0	1	0	1	0	0
26.500000~26.999999	0	1	0	0	0	1	0	0	0	1	0	1	0	0
27.000000~27.499999	0	1	0	0	0	1	0	0	0	1	0	1	0	0
27.500000~27.999999	0	1	0	0	0	1	0	0	0	1	0	1	0	0
28.000000~28.499999	0	1	0	0	0	1	0	0	0	1	0	1	0	0
28.500000~28.999999	0	1	0	0	0	1	0	0	0	1	0	1	0	0
29.000000~29.499999	0	1	0	0	0	1	0	0	0	1	0	1	0	0
29.500000~29.999999	0	1	0	0	0	1	0	0	0	1	0	1	0	0

16) Band data 2

Frequency	RX BPF DATA					TX LPF DATA				VCO DATA				
(MHz)	28C	RB3	RB2	RB1	RB0	TB3	TB2	TB1	TB0	BCH	VB3	VB2	VB1	VB0
30.000000~30.499999	0	1	0	0	0	1	0	0	0	1	0	1	0	0
30.500000~30.999999	0	1	0	0	0	0	0	0	0	1	0	1	0	0
31.000000~31.499999	0	1	0	0	0	0	0	0	0	1	0	1	0	0
31.500000~31.999999	0	1	0	0	0	0	0	0	0	1	0	1	0	0
32.000000~32.499999	0	1	0	0	0	0	0	0	0	1	0	1	0	0
32.500000~32.999999	0	1	0	0	0	0	0	0	0	1	0	1	0	0
33.000000~33.499999	0	1	0	0	0	0	0	0	0	1	0	1	0	0
33.500000~39.999999	0	1	0	0	0	0	0	0	0	1	0	1	0	0
34.000000~34.999999	0	1	0	0	0	0	0	0	0	1	0	1	0	0
34.500000~34.999999	0	1	0	0	0	0	0	0	0	1	0	1	0	0
35.000000~35.499999	0	1	0	0	0	0	0	0	0	1	0	1	0	0
35.500000~35.999999	0	1	0	0	0	0	0	0	0	1	0	1	0	0
36.000000~36.499999	0	1	0	0	0	0	0	0	0	1	0	1	0	0
36.500000~36.999999	0	1	0	0	0	0	0	0	0	1	0	1	0	0
37.000000~37.499999	0	1	0	0	0	0	0	0	0	1	0	1	0	0
37.500000~37.999999	0	1	0	0	0	0	0	0	0	1	0	1	0	0
38.000000~38.499999	0	1	0	0	0	0	0	0	0	1	0	1	0	0
38.500000~38.999999	0	1	0	0	0	0	0	0	0	1	0	1	0	0
39.000000~39.499999	0	1	0	0	0	0	0	0	0	1	0	1	0	0
39.500000~39.999999	0	1	0	0	0	0	0	0	0	1	0	1	0	0
40.000000~40.499999	0	1	0	0	0	0	0	0	0	1	0	1	0	0
40.500000~40.999999	0	1	0	0	1	0	0	0	0	0	1	0	0	0
41.000000~41.499999	0	1	0	0	1	0	0	0	0	0	1	0	0	0
41.500000~41.999999	0	1	0	0	1	0	0	0	0	0	1	0	0	0
42.000000~42.499999	0	1	0	0	1	0	0	0	0	0	1	0	0	0
42.500000~42.999999	0	1	0	0	1	0	0	0	0	0	1	0	0	0
43.000000~43.499999	0	1	0	0	1	0	0	0	0	0	1	0	0	0
43.500000~43.999999	0	1	0	0	1	0	0	0	0	0	1	0	0	0
44.000000~44.499999	0	1	0	0	1	0	0	0	0	0	1	0	0	0
44.500000~44.999999	0	1	0	0	1	0	0	0	0	0	1	0	0	0
45.000000~45.499999	0	1	0	0	1	0	0	0	0	0	1	0	0	0
45.500000~45.999999	0	1	0	0	1	0	0	0	0	0	1	0	0	0

CIRCUIT DESCRIPTION

Frequency	RX BPF DATA					TX LPF DATA				VCO DATA				
(MHz)	28C	RB3	RB2	RB1	RB0	TB3	TB2	TB1	TB0	BCH	VB3	VB2	VB1	VB0
46.000000~46.499999	0	1	0	0	1	0	0	0	0	0	1	0	0	0
46.500000~46.999999	0	1	0	0	1	0	0	0	0	0	1	0	0	0
47.000000~47.499999	0	1	0	0	1	0	0	0	0	0	1	0	0	0
47.500000~47.999999	0	1	0	0	1	0	0	0	0	0	1	0	0	0
48.000000~48.499999	0	1	0	0	1	0	0	0	0	0	1	0	0	0
48.500000~48.999999	0	1	0	0	1	0	0	0	0	0	1	0	0	0
49.000000~49.499999	0	1	0	0	1	0	0	0	0	0	1	0	0	0
49.500000~49.999999	0	1	0	0	1	0	0	0	0	0	1	0	0	0
50.000000~50.499999	0	1	0	0	1	0	0	0	0	0	1	0	0	0
50.500000~50.999999	0	1	0	0	1	0	0	0	0	0	1	0	0	0
51.000000~51.499999	0	1	0	0	1	0	0	0	0	0	1	0	0	0
51.500000~51.999999	0	1	0	0	1	0	0	0	0	0	1	0	0	0
52.000000~52.499999	0	1	0	0	1	0	0	0	0	0	1	0	0	0
52.500000~52.999999	0	1	0	0	1	0	0	0	0	0	1	0	0	0
53.000000~53.499999	0	1	0	0	1	0	0	0	0	0	1	0	0	0
53.500000~53.999999	0	1	0	0	1	0	0	0	0	0	1	0	0	0
54.000000~54.499999	0	1	0	0	1	0	0	0	0	0	1	0	0	0
54.500000~54.999999	0	1	0	0	1	0	0	0	0	0	1	0	0	0
55.000000~55.499999	0	1	0	0	1	0	0	0	0	0	1	0	0	0
55.500000~55.999999	0	1	0	0	1	0	0	0	0	0	1	0	0	0
56.000000~56.499999	0	1	0	0	1	0	0	0	0	0	1	0	0	0
56.500000~56.999999	0	1	0	0	1	0	0	0	0	0	1	0	0	0
57.000000~57.499999	0	1	0	0	1	0	0	0	0	0	1	0	0	0
57.500000~57.999999	0	1	0	0	1	0	0	0	0	0	1	0	0	0
58.000000~58.499999	0	1	0	0	1	0	0	0	0	0	1	0	0	0
58.500000~58.999999	0	1	0	0	1	0	0	0	0	0	1	0	0	0
59.000000~59.499999	0	1	0	0	1	0	0	0	0	0	1	0	0	0
59.500000~59.999999	0	1	0	0	1	0	0	0	0	0	1	0	0	0

CIRCUIT DESCRIPTION

17) Function of IC pins

• **Main CPU : μPD78213GJ (IC1)**

Port name	Pin No.	Name	Function	I/O	Remarks
P00	44	LLE3	LED driver enable	O	
P01	45	LDA	Display data	O	
P02	46	LCK	Display clock	O	
P03	48	LLE1	LCD driver 1 enable	O	
P04	49	LLE2	LCD driver 2 enable	O	
P05	50	P05	Unused	O	
P06	51	LBL	Display control output	O	"H" : Display
P07	53	P07	Unused	O	
P20	14	NMI	Unused	I	
P21~P26	15~20	INTP0~INTP5	Unused	I	
P27	21	SI	Unused	I	
P30	23	RXD	Serial receive data	I	
P31	24	TXD	Serial transmit data	O	
P32	25	CTS	Serial transmission enable	I	
P33	26	RTS	Serial transmission request	O	
P34,P35	39,41	TO0,TO1	Unused	O	
P36	42	MDI	Input from EEPROM	I	
P37	43	BZ	Beep output	O	
P60	61	MCS	EEPROM chip select	O	
P61	60	MSK	EEPROM serial clock	O	
P62	59	MDO	Output to EEPROM	O	
P63	58	STR	VS-2 synthesis start signal	O	"H" : Synthesis start
AN0	38	SM	S-meter voltage	I	
AN1	36	REV	Reflected wave voltage	I	
AN2	35	ALAF	AF voltage (RX)/ALC voltage (TX)	I	
AN3	34	RFM	Power meter voltage	I	
AN4	33	POD2	AT variable capacitor 2 position voltage	I	
AN5	32	POD1	AT variable capacitor 1 position voltage	I	
AN6	55	IFS	IF SHIFT potentiometer position voltage	I	
AN7	54	RIT	RIT potentiometer position voltage	I	
P40~P47	2~11	AD0~AD7	CPU data bus	I/O	
P50~P57	1~68	A8~A15	CPU address bus	O	
RD,WR	57,56	RD,WR	Read, write signal	O	
ASTB	12	ASTB	Address/data separation signal	O	
RESET	63	RESET	Reset signal	I	"L" : Reset
X1,X2	64,65	X1,X2	CPU clock crystal pin	I	f : 11.0592MHz
AVref	31	AVref	Analog-to-digital converter reference voltage input	I	
AVss	30	AVss	Analog-to-digital converter ground pin	I	

CIRCUIT DESCRIPTION

• **Extended I/O : CXD1095Q (IC6)**

Port name	Pin No.	Name	Function	I/O	Remarks
PA0	54	CDA	DDS serial data	O	
PA1	55	CCK	DDS clock	O	
PA2	56	CLE1	DDS1 enable	O	
PA3	59	ABSL	DDS1 register selection	O	
PA4	60	CLE2	DDS2 enable	O	
PA5	61	CASL	DDS2 register selection	O	
PA6	62			O	
PA7	63	BCH	PLL band signal	O	
PB0	64	VB0	VCO0 select signal	O	
PB1	3	VB1	VCO1 select signal	O	
PB2	4	VB2	VCO2 select signal	O	
PB3	5	VB3	VCO3 select signal	O	
PB4	6	PLE1	PLL1 enable	O	
PB5	7	PCK	PLL clock	O	
PB6	8	PLE2	PLL2 enable	O	
PB7	9	PDA	PLL serial data	O	
PC0	11	FDA	IF parallel converter data	O	
PC1	12	FCK	IF parallel converter clock	O	
PC2	13	FLE1	IF parallel converter 1 enable	O	
PC3	14	FLE2	IF parallel converter 2 enable	O	
PC4	15	TOB	Tone unit control signal	O	"H" : Tone on
PC5	16	LIN	Linear standby relay control signal	O	"H" : Linear on
PC6	17	ABK	AF blanking signal	O	"H" : Blanking on
PC7	18	TXI	Transmission band data	O	"L" : Trnasmission inhibit band
PD0	20	ESS	Forced transmission command signal	O	"H" : Transmission command
PD1	21	SD	VS-2 synthesis data	O	
PD2	22	SCK	VS-2 clock	O	
PD3	23			O	
PD4	24	50HG	50MHz band final signal	I	"L" : 50MHz band, 50W
PD5	27	HFHG	HF band final signal	I	"L" : HF band, 100W
PD6	28	CSS	SEND switch input	I	"L" : Transmission command
PD7	29	DBC	External DSP connection signal	I	"L" : External DSP connected
PE0	49	UL	PLL unlock input	I	"L" : Unlock
PE1	50	BSY	VS-2 busy signal	I	"H" : Busy
PE2	52	MU	MIC UP switch input	I	"L" : Switch on
PE3	53	MD	MIC DOWN switch input	I	"L" : Switch on
D0~D7	30~39	D0~D7	Data bus	I/O	
A0~A2	46~48	A0~A2	Address bus	I	
CS	45	CS	Chip select signal	I	
RD,WR	43,44	RD,WR	Read, write signal	I	
ODEN	41	ODEN	Output disable	I	Connect to RESET

CIRCUIT DESCRIPTION

- **Extended I/O : CXD1095Q (IC7)**

Port name	Pin No.	Name	Function	I/O	Remarks
PA0~PA2	54~56	S0~S2	Key matrix select output	O	"L" : Column 1 selected
PA3~PA5	59~61	S3~S5	Key matrix select output	O	"L" : Column 1 selected
PA6	62			O	
PA7	63	S7	Diode matrix select output	O	"L" : Select
PB0	64	K0	Key matrix input	I	
PB1~PB6	3~8	K1~K6	Key matrix input	I	
PB7	9			I	
PC0	11	RDA	RF parallel converter data	O	
PC1	12	RCK	RF parallel converter clock	O	
PC2	13	RLE1	RF parallel converter 1 enable	O	
PC3	14	RLE2	RF parallel converter 2 enable	O	
PC4	15	RBK	RF blanking signal	O	"H" : Blanking on
PC5	16			O	
PC6	17	TSO	AT-300 control output	O	
PC7	18	TTO	AT-300 control output	O	
PD0	20	PR22	AT-450 motor rotation output	O	
PD1	21	PR21	AT-450 motor rotation output	O	
PD2	22	PR12	AT-450 motor rotation output	O	
PD3	23	PR11	AT-450 motor rotation output	O	
PD4	24	ATA	AT-450 AUTO/THRU signal	O	"H" : Auto
PD5	27	APRE	AT-450 preset control select signal	O	"H" : auto
PD6	28	SPED	AT-450 motor speed output	O	"L" : Motor stop
PD7	29	ATL	AT TUNE LED output	O	"H" : LED on
PE0	49	ATI	AT-450 installation signal	I	"L" : AT-450 installed
PE1	50			I	
PE2	52	TSI	AT-300 control input	I	
PE3	53	TTI	AT-300 control input	I	
D0~D7	30~39	D0~D7	Data bus	I/O	
A0~A2	46~48	A0~A2	Address bus	I	
CS	45	CS	Chip select signal	I	
RD,WR	43,44	RD,WR	Read, write signal	I	
ODEN	41	ODEN	Output disable	I	Connect to RESET

CIRCUIT DESCRIPTION

Option setting

If the ENT key is held down and the power switched on, options can be set. The menu number is incremented or decremented with the click encoder. Options can be changed with the UP and DOWN keys.

1) Option setting menu

No.	Option setting menu	Setting	Initial value
1	AT-300 control	ON/OFF	OFF
2	IF filter (8.83-2.4k/1.8k) installation	ON/OFF	OFF
3	IF filter (8.83-500/270) installation	ON/OFF	OFF
4	IF filter (455-500/250) installation	ON/OFF	OFF

Extended Function 1

1) Extended menu mode

If the LSB/USB key is held down and the power switched on, extended function 1 mode is entered.

2) Menu number selection

Select a menu number with the click encoder.
The menu number can be selected endlessly.

3) Menu data modification

- **UP key**
  Increment the menu number for selection.
  ON = 1
  Not endless

- **DOWN key**
  Decrement the menu number for selection.
  OFF = 0
  Not endless

4) Extended menu mode termination

The entered menu mode is terminated with the CLR key.

The entered menu mode is not terminated with any other key.

If the power is switched off and on again, the entered menu mode is terminated.

5) Memory protect erase inhibit

Disable erasuring by the CLR key. The memory contents are erased by all resetting and A=B resetting if backup fails.

6) Memory protect write inhibit

Writing to memory is inhibited.

7) Extended function 1 menu

No.	Extended function 1 setting menu	Setting	Initial value
01	Main encoder operation	ON/OFF	ON
02	Click encoder last digit rounding	ON/OFF	ON
03	Operation with numeric keys	ON/OFF	ON
04	Beep	ON/OFF	ON
05	Mode Morse	ON/OFF	ON
06	Warning Morse	ON/OFF	ON
07	10-Hz display	ON/OFF	ON
08	Meter peak hold	ON/OFF	OFF
09	Band memory	ON/OFF	ON
10	SSB auto mode	ON/OFF	ON
11	NB2 operation	ON/OFF	ON
12	Memory channel crossing	ON/OFF	OFF
13	M.IN auto increment	ON/OFF	OFF
14	Standard memory operation with encoder	ON/OFF	OFF
15	Scan hold during program scan	ON/OFF	OFF
16	Linear control relay	ON/OFF	OFF
17	Clone function	ON/OFF	OFF
18	Clone function VFO write	ON/OFF	OFF
19	Mute mode	ON/OFF	OFF
20	Memory protect 1 (erase inhibit)	ON/OFF	OFF
21	Memory protect 2 (write inhibit)	ON/OFF	OFF

CIRCUIT DESCRIPTION

Extended Function 2

If the MIN key is held down and the power switched on, the extended function 2 menu is selected.

1) CW pitch

The pitch can be changed in 9 levels in 50Hz steps. The sidetone is not changed when the pitch is changed. The frequency is not changed endlessly.

The pitch can be set to the following frequencies. (Initial value: 800Hz)

400 ⇄ 450 ⇄ 500 ⇄ 550 ⇄ 600 ⇄ 650 ⇄ 700 ⇄ 750 ⇄ 800Hz

2) Extended function 2 menu

No.	Extended function 2 setting menu	Setting	Initial value
31	Built-in AT tune	ON/OFF	ON
32	Return to receive mode after AT tune	ON/OFF	ON
33	Main encoder rotation change	5/10kHz	10kHz
34	One step of click encoder	1/2/5/10kHz	10kHz
35	One step of click encoder in the AM BC band	9/10kHz	10kHz
36	One step of BAND UP/DOWN key	500/1000kHz	1000kHz
37	FSK shift width	170/200/425/850Hz	170Hz
38	Mark during FSK polarity keying	ON/OFF	ON
39	FSK tone	1275/2125Hz	2125Hz
40	CW pitch	400~800 (50Hz step)	800
41	RIT variable range	±1.1kHz/±2.2kHz	±1.1kHz
42	HELLO display when power is switched on	ON/OFF	OFF

Adjustment Function

1) Adjustment mode

If the AIP, XIT, and SCAN keys are held down and the power switched on, the adjustment mode is entered.

2) Menu number selection

Select the menu number with the click encoder.

The menu number can be selected endlessly.

3) CLR key (adjustment menu mode)

Terminate the adjustment menu mode.

The adjustment menu mode is terminated only with the CLR key.

The adjustment menu mode is terminated when the power is switched off and on again.

For the signal-strength meter setting, when the UP key is pressed at point S9 and the full-scale point, a meter curve is automatically created according to the preset S0 point and signal-strength meter voltages at three points.

For the ALC meter setting, a meter curve is automatically created according to three points: ALC start, ALC ZONE MAX, and ALC full scale.

When adjustment ends, carry out #17 EEPROM write, and after the beep, carry out the next operation. If the operation is canceled in the middle, or the power is switched off, data is not written to the EEPROM.

CIRCUIT DESCRIPTION

4) Adjustment menu

No.	Adjustment menu	Setting	Initial value
01	CS (Checksum)	XXXX	–
02	Write adjusted frequency into Mch with the UP key	–	–
03	Change the transmit/receive frequency (Mch number) The frequency is not changed if the UP/DN key is not pressed	Channel number is displayed	ch00
04	Set RIT zero adjustment VR to zero position, and press the UP key	–	default
05	Set IFS zero adjustment VR to zero position, and press the UP key	–	default
06	IF filter selection 8.83/2.4k, 455/2.4k	–	None
07	IF filter selection 8.83/500, 455/500	–	None
08	Signal-strength meter table low band UP key when SSG = S9. UP key when SSG = S9+60		default
09	Signal-strength meter table middle band UP key when SSG = S9. UP key when SSG = S9+60		default
10	Signal-strength meter table high band UP key when SSG = S9. UP key when SSG = S9+60		default
11	Carrier point LSB adjustment 10-Hz step. Forced to LSB mode	–40~40	0
12	Carrier point USB adjustment 10-Hz step. Forced to USB mode	–40~40	0
13	ALC meter table Press the UP key at ALC start Press the UP key at ALC ZONE MAX Press the UP key at ALC full scale		default
14	Receive DSP signal (RDC) is forced on	ON/OFF	OFF
15	Transmit DSP signal (TDC) is forced on	ON/OFF	OFF
16	AT10 compulsorily on	ON/OFF	OFF
17	EEPROM write Press the UP or DN key. A beep sounds when the write ends		–

SEMICONDUCTOR DATA

I/O Port Expanding Interface : TC9174F (RF unit IC1, 3)

- **Terminal connection diagram**

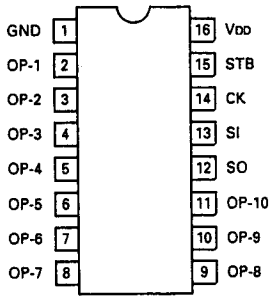

- **Block diagram**

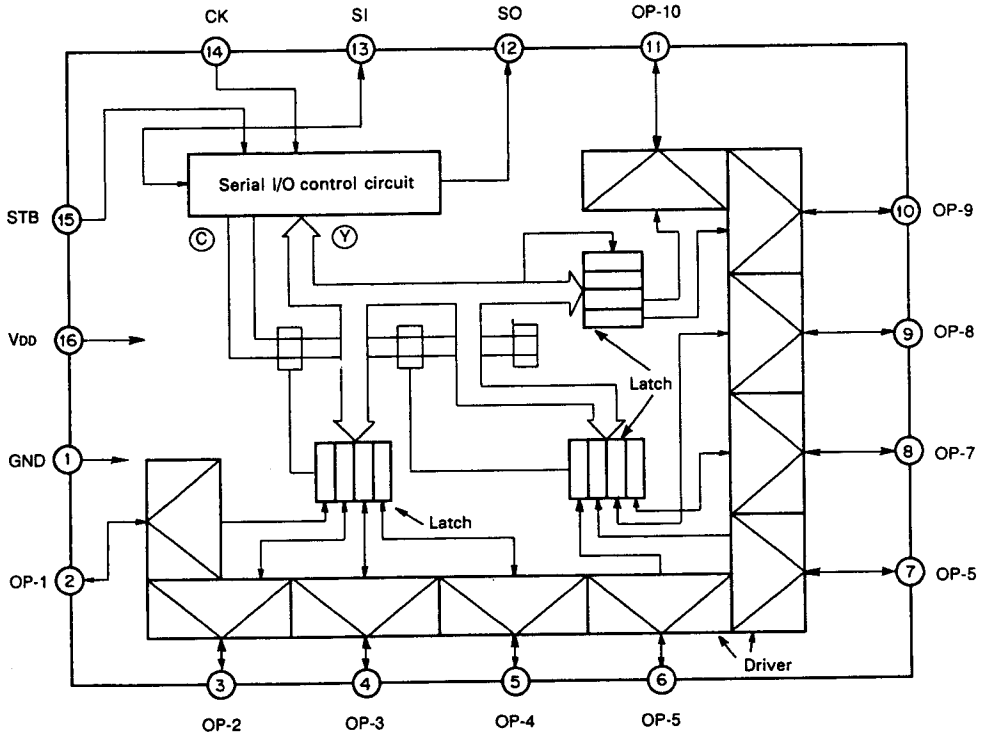

- **Terminal function**

Pin No.	Symbol	Pin name	Function / Operation
1	GND	Power supply pin	Supplies 5V ± 10%.
2	OP-1	General-purpose output port No. 1~10	General-purpose output port. Nch open drain output for high withstand voltage and high current drive. Sink current : 10mA MIN Withstand voltage : 18V MIN
3	OP-2		
4	OP-3		
5	OP-4		
6	OP-5		
7	OP-6		
8	OP-7		
9	OP-8		
10	OP-9		
11	OP-10		
12	SO	Serial output	Data output port of serial I/O port, Pch open drain output.
13	SI	Serial input	Data input port of serial I/O port, schmitt input.
14	CK	Clock signal input	Clock signal input port of serial I/O port, schmitt input.
15	STB	Strobe signal input	Strobe input serial I/O port, schmitt input.
16	VDD	Power supply pin	Supplies 5V ± 10%.

SEMICONDUCTOR DATA

BCD-Decimal : SN74LS145NS (RF unit IC2)

- **Terminal connection diagram**

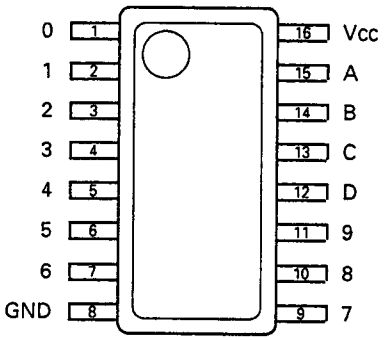

- **Function table**

No.	Input				Output									
	D	C	B	A	0	1	2	3	4	5	6	7	8	9
0	L	L	L	L	L	H	H	H	H	H	H	H	H	H
1	L	L	L	H	H	L	H	H	H	H	H	H	H	H
2	L	L	H	L	H	H	L	H	H	H	H	H	H	H
3	L	L	H	H	H	H	H	L	H	H	H	H	H	H
4	L	H	L	L	H	H	H	H	L	H	H	H	H	H
5	L	H	L	H	H	H	H	H	H	L	H	H	H	H
6	L	H	H	L	H	H	H	H	H	H	L	H	H	H
7	L	H	H	H	H	H	H	H	H	H	H	L	H	H
8	H	L	L	L	H	H	H	H	H	H	H	H	L	H
9	H	L	L	H	H	H	H	H	H	H	H	H	H	L
Invalidity	H	L	H	L	H	H	H	H	H	H	H	H	H	H
	H	L	H	L	H	H	H	H	H	H	H	H	H	H
	H	H	L	L	H	H	H	H	H	H	H	H	H	H
	H	H	H	L	H	H	H	H	H	H	H	H	H	H
	H	H	H	H	H	H	H	H	H	H	H	H	H	H

H : High level, L : Low level

- **Switching time waveform**
  (Voltage waveform of transmission delay time)

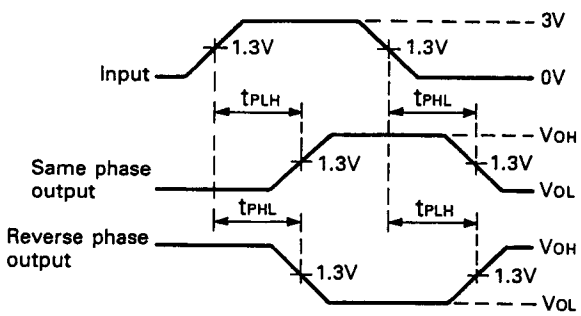

Condition of all input waveform
Repeat frequency : PRR ≤ 1MHz, tr ≤ 15ns, tf ≤ 6ns
Duty cycle : 50%

- **Block diagram**

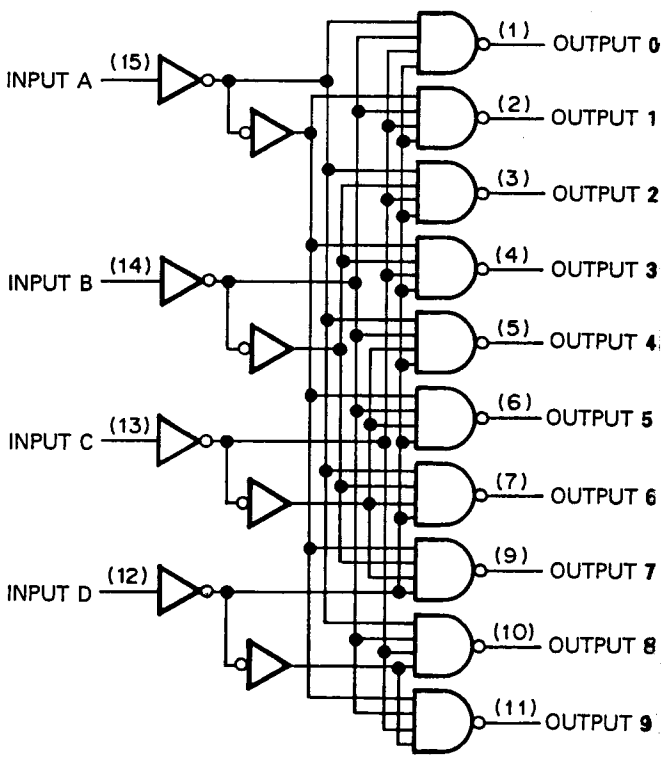

SEMICONDUCTOR DATA

Analog Switch : TC4066BF (RF unit IC4)

- **Terminal connection diagram**

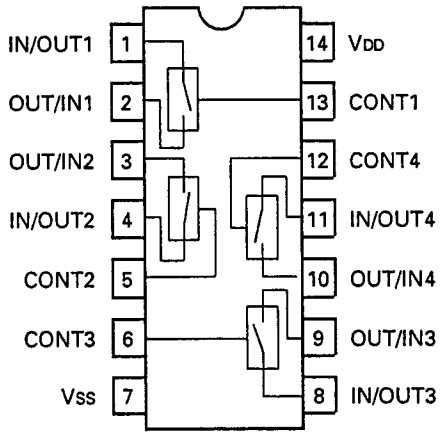

- **Circuit diagram**

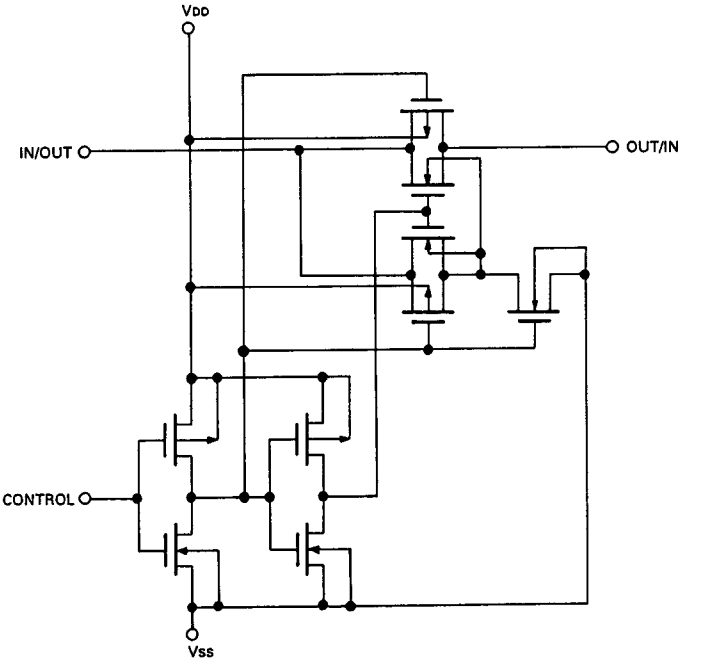

- **Truth table**

Control	Impedance between IN/OUT ~ OUT/IN
H	0.5 ~ 5 x $10^2\Omega$
L	> $10^9\Omega$

Address Latch : TC74HC573AF (Digital unit IC4)

- **Terminal connection diagram**

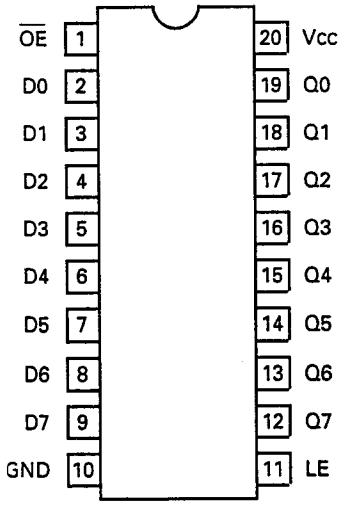

- **Logic circuit diagram**

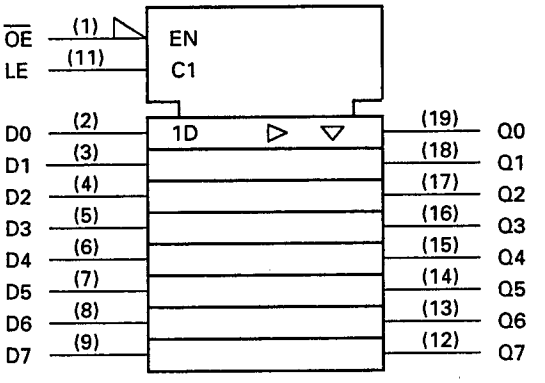

- **Truth table**

Inputs			Outputs
$\overline{OE}$	LE	D	Q
H	X	X	HZ
L	L	X	Qn
L	H	L	L
L	H	H	H

X : Don't care
HZ : High impedance
Qn : Q-output level before LE comes to "L"

- **System diagram**

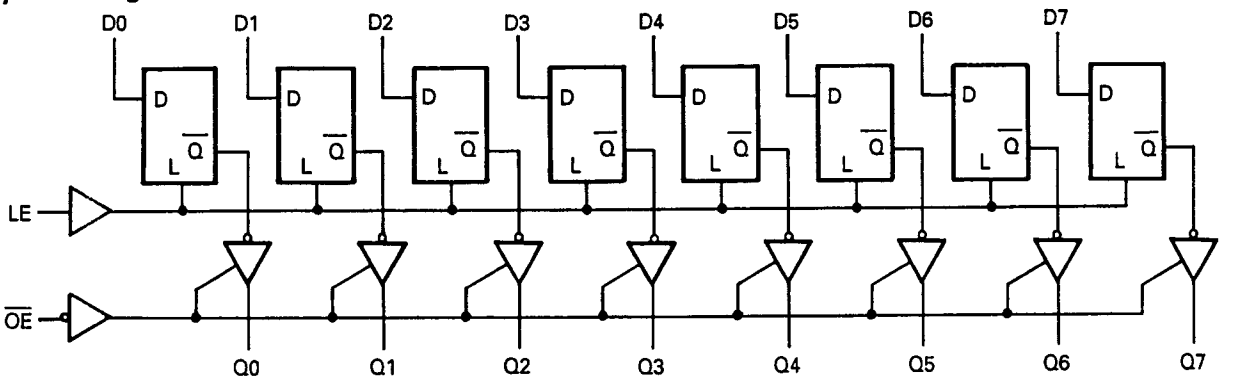

SEMICONDUCTOR DATA

CPU : μPD78213GJ-5BJ (Digital unit IC1)

- **Terminal connection diagram**

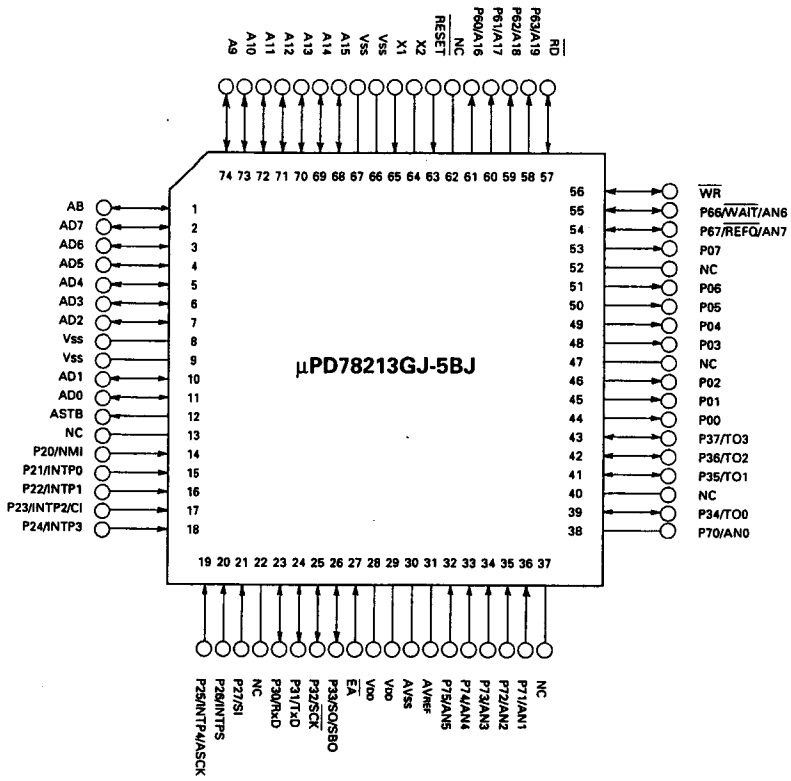

- **Block diagram**

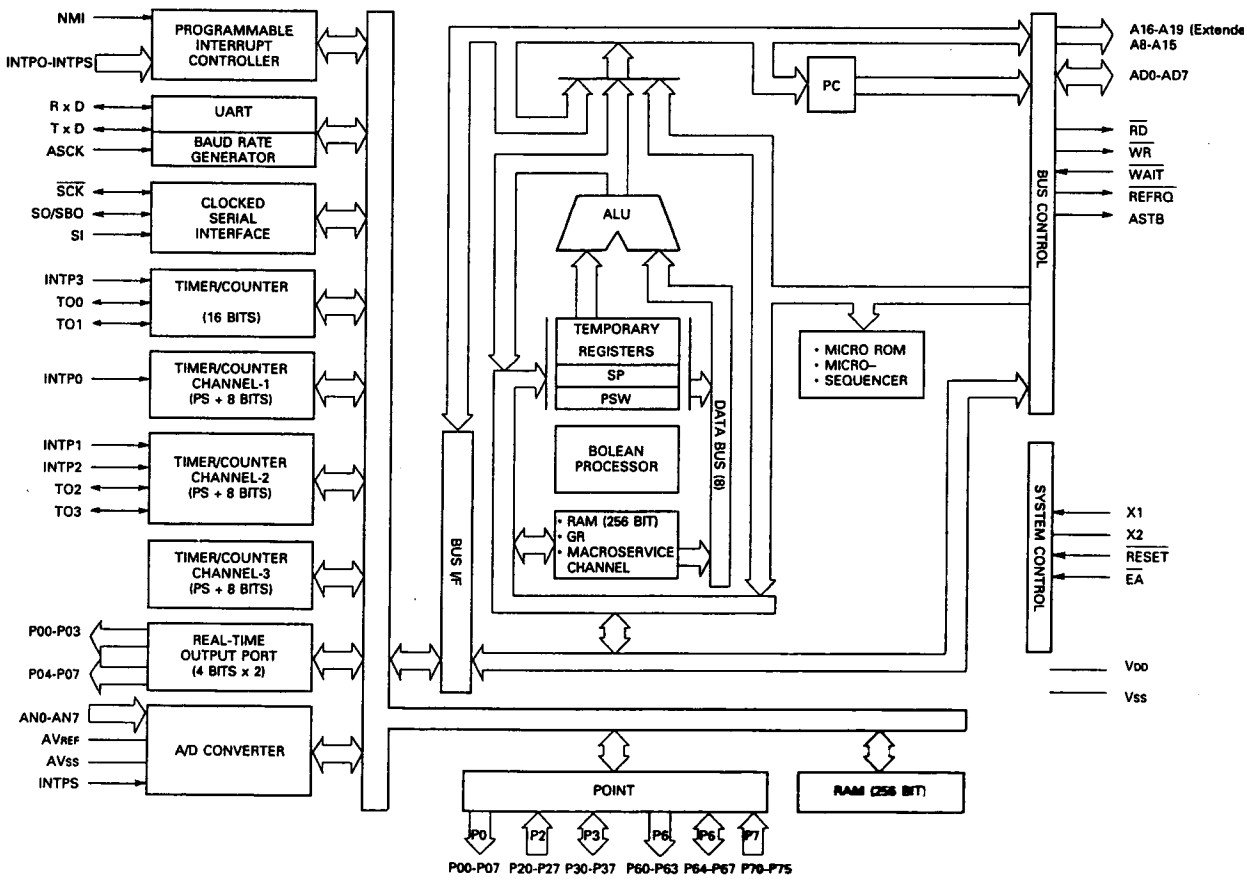

SEMICONDUCTOR DATA

Address Decoder : TC74HC138AF (Digital unit IC5)

- Terminal connection diagram
- Logic diagram

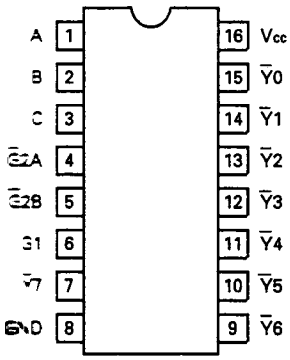

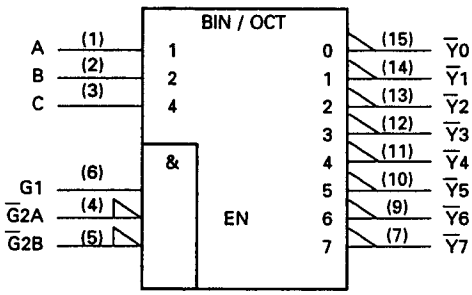

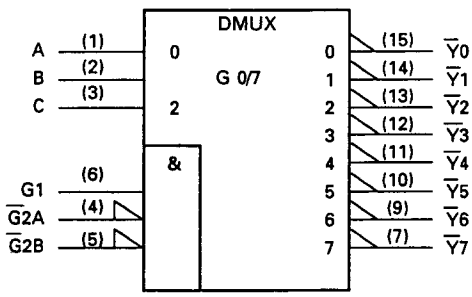

- Truth table

Inputs						Outputs								Selected Output
Enable			Select											
G1	$\overline{G2A}$	$\overline{G2B}$	C	B	A	$\overline{Y0}$	$\overline{Y1}$	$\overline{Y2}$	$\overline{Y3}$	$\overline{Y4}$	$\overline{Y5}$	$\overline{Y6}$	$\overline{Y7}$	
L	X	X	X	X	X	H	H	H	H	H	H	H	H	NONE
X	H	X	X	X	X	H	H	H	H	H	H	H	H	NONE
X	X	H	X	X	X	H	H	H	H	H	H	H	H	NONE
H	L	L	L	L	L	L	H	H	H	H	H	H	H	$\overline{Y0}$
H	L	L	L	L	H	H	L	H	H	H	H	H	H	$\overline{Y1}$
H	L	L	L	H	L	H	H	L	H	H	H	H	H	$\overline{Y2}$
H	L	L	L	H	H	H	H	H	L	H	H	H	H	$\overline{Y3}$
H	L	L	H	L	L	H	H	H	H	L	H	H	H	$\overline{Y4}$
H	L	L	H	L	H	H	H	H	H	H	L	H	H	$\overline{Y5}$
H	L	L	H	H	L	H	H	H	H	H	H	L	H	$\overline{Y6}$
H	L	L	H	H	H	H	H	H	H	H	H	H	L	$\overline{Y7}$

X : Don't care

System diagram

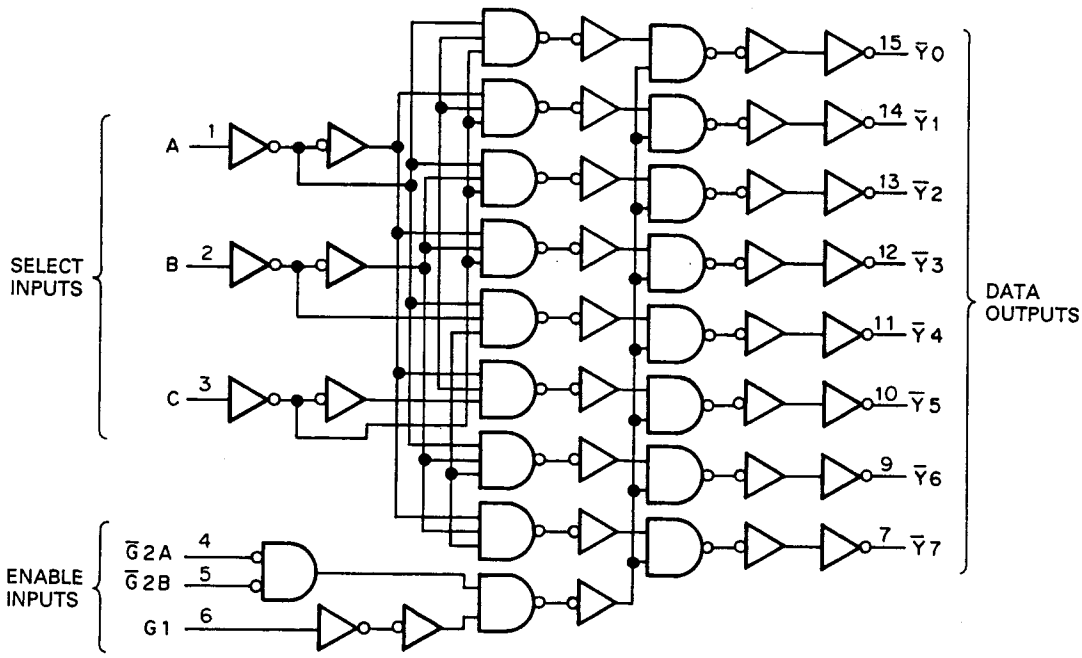

TS-450S/690S

SEMICONDUCTOR DATA

Encoder Gate Array : LZ92K371 (Digital unit IC8)

- **Terminal connection diagram**

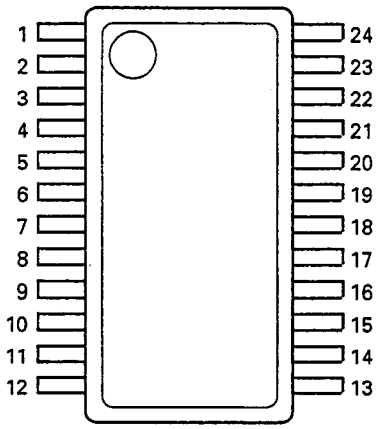

- **Description of terminal**

Pin No.	I/O	Signal name	Pin No.	I/O	Signal name
1	–	GND	13	TO	D7
2	–	NC	14	–	NC
3	ICU	CK3	15	TO	D6
4	ICU	CK4	16	TO	D5
5	ICU	CK1	17	–	NC
6	ICU	CK2	16	TO	D4
7	–	NC	19	TO	D3
8	IC	A0	20	TO	D2
9	IC	CS	21	–	NC
10	IC	RD	22	TO	D1
11	–	NC	23	TO	D0
12	–	GND	24	–	Vcc

IC : Input terminal (Input CMOS level)
ICU : Input terminl (Input CMOS level, with pull-up resistor)
TO : Output terminal (Tristate output buffer)

- **AC response**

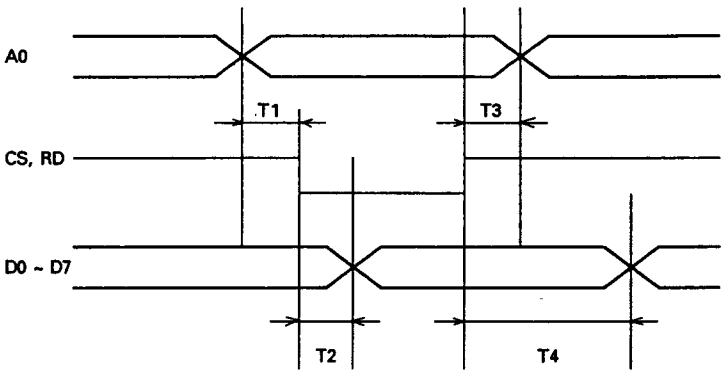

Item	Symbol	Min	Typ	Max	Unit
Address CS, RD setup time	T1	50			ns
CS, RD access time	T2			200	ns
Address hold time	T3	0			ns
CS output hold time	T4	20			ns

System Reset : M51951BML (Digital unit IC10)

- **Terminal connection diagram**

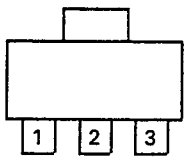

- **Block diagram**

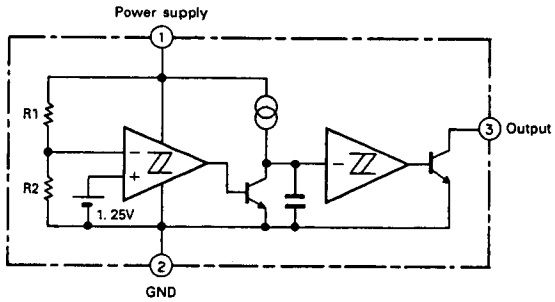

- **Operation waveform**

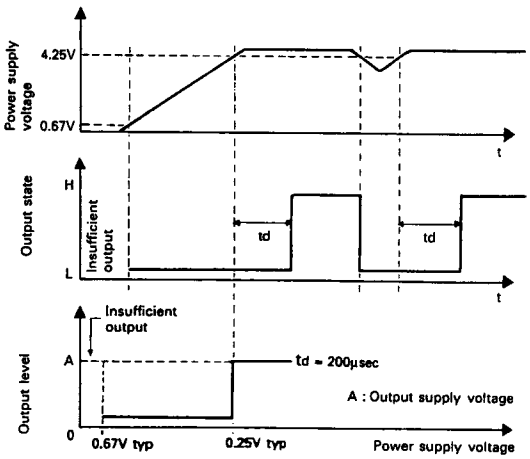

SEMICONDUCTOR DATA

Frequency Divider : μPD74HC390G (PLL unit IC1, 2)

- **Terminal connection diagram**

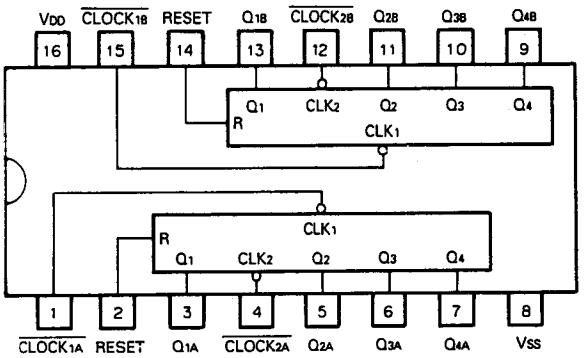

- **Block diagram**

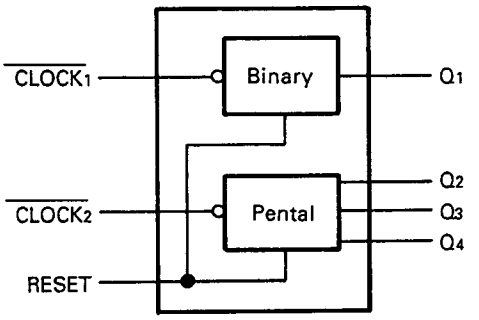

- **Truth table**

CLOCK		RESET	OUTPUT
CLK1	CLK2		
X	X	H	L
↘	X	L	Binary count
X	↘	L	Pental count

H : High level
L : Low level
X : H or L

- **Timing chart (When connecting Q1 with CLOCK)**

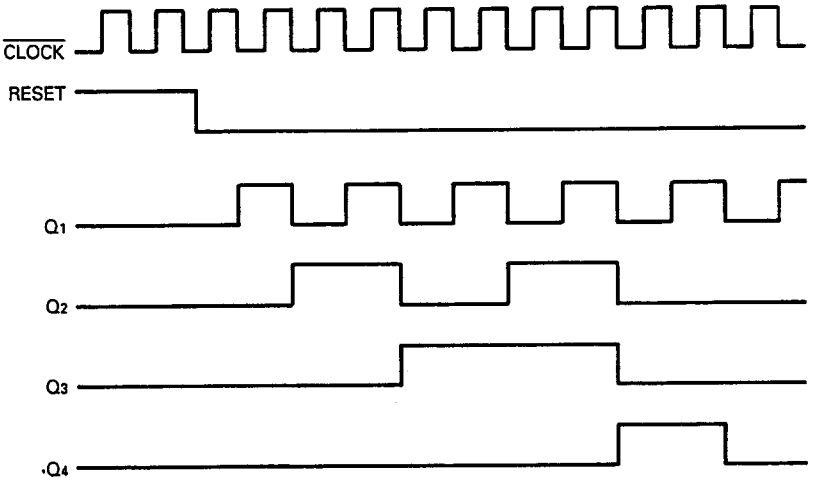

D-FF : SN74S74NS (AT unit IC1)

- **Terminal connection diagram**

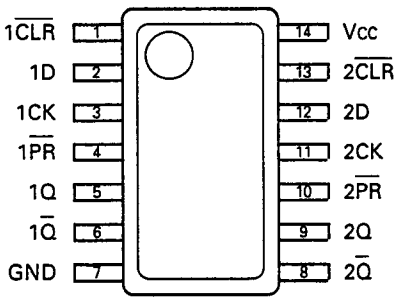

- **Function table**

Input				Output	
PR	CLR	CK	D	Q	Q
L	H	X	X	H	L
H	L	X	X	L	H
L	L	X	X	?	?
H	H	↑	H	H	L
H	H	↑	L	L	H
H	H	L	X	Qo	Qo

H : High level
L : Low level
X : No indication
↑ : Rising edge
Qo : State before ↑
? : Unstable state

SEMICONDUCTOR DATA

PLL : CXD1225M (PLL unit IC5, 6)

- **Block diagram**

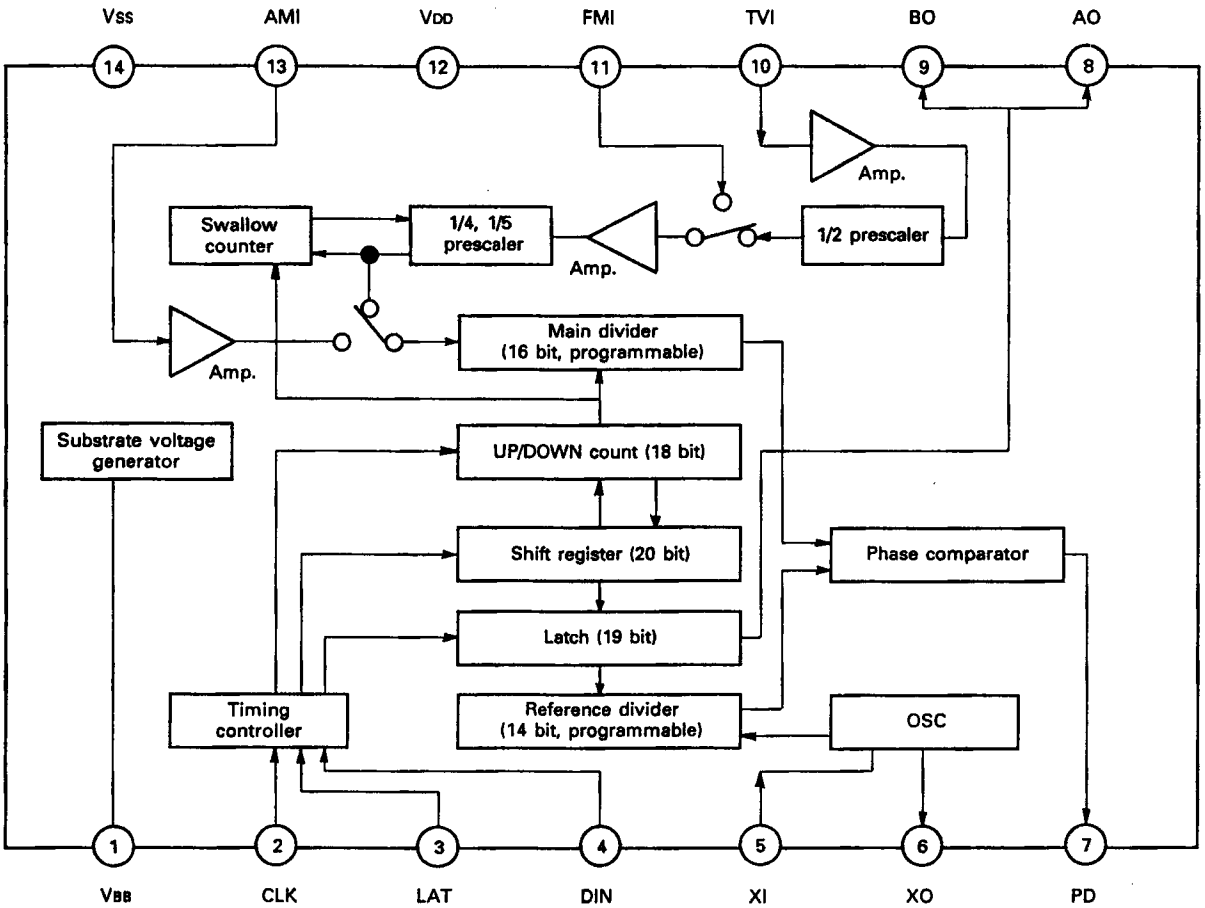

- **Terminal description**

Pin No.	Symbol	Description
1	VBB	Board terminal (connection a 0.01μF capacitor between GND).
2	CLK	Clock input for 20-bit series data input (shifted by rise).
3	LAT	Latch signal input terminal for shift register input data (latched by rise) and up/down clock input terminal (Changes the state at rise).
4	DIN	Data input terminal and up/down mode select terminal (up mode for "H" level, down mode for "L" level).
5	XI	Reference signal generating oscillator connecting terminal (max. 13MHz, standard 4.0MHz).
6	XO	
7	PD	Phase comparator output terminal (3 states).
8	AO	External control signal output terminal/unlock output terminal (E/E MOS push-pull).
9	BO	External control signal output/data check terminal (E/E MOS push-pull).
10	TVI	RF signal input terminal (300MHz or 350MHz max.). 1/2 prescaler incorporated.
11	FMI	RF signal input terminal (150MHz or 180MHz max.)
12	VDD	Power supply (+5V).
13	AMI	RF signal input terminal (40MHz or 50MHz max.).
14	VSS	GND terminal.

DESCRIPTION OF COMPONENTS

RF UNIT (X44-3130-XX) -00 : TS-690S -01 : TS-450S

Ref. No.	Use/Function	Operation/Condition/Compatibility
Q1,2	DC switch	K1 control when ATT.
Q3	RF amplifier	21.5MHz~40.5MHz
Q4	Buffer	21.5MHz~40.5MHz
Q5	DC switch	RX signal line to GND when TX.
Q6	DC switch	On when 21.5MHz~26.5MHz, off when 26.5MHz~40.5MHz.
Q7	RF amplifier	40.5MHz~60MHz. (TS-690 only)
Q8	BUffer	40.5MHz~60MHz. (TS-690 only)
Q9,10	RX RF amplifier	When AIP off.
Q11,12	DC switch	On when AIP on.
Q13	DC switch	Off when AIP on.
Q14~17	RX 1st mixer	f_{RX} → 73.05MHz.
Q18	TX RF amplifier	Drive output.
Q19	TX amplifier	
Q20,21	TX 3rd mixer	Conversion transmission frequency 73.05MHz.
Q22,23	DC switch	Off when ~40.5MHz, on when 40.5MHz~60MHz.
Q24	VCO amplifier	
Q25	IF amplifier	73.05MHz.
Q26,27	2nd mixer	73.05MHz → 8.83MHz.
Q28	IF amplifier	8.83MHz.
Q29,30	3rd mixer	8.83MHz → 455kHz.
Q31	Buffer	8.83MHz for NB.
Q32~34	Amplifier	8.83MHz for NB.
Q35	Switching	For NB2.
Q36	Buffer	For NB.
Q37,39,40	Switching	For NB1.
Q38	AGC amplifier	For NB.
Q41	Switching	For RBK.
Q42	Switching	When NB and RBK.
Q43	Switching	On when RBC.
Q45,46	TX 2nd mixer	8.83MHz → 73.05MHz.
Q48	IF amplifier	8.83MHz ALC, CKY.
IC1	Interface for I/O port extended	RF BPF.
IC2	BCD → decimal	RF BPF selection.
IC3	Interface for I/O port extended	8.83MHz filter changeover.
IC4	Analog switch	NB changeover.
IC5	Mixer	455kHz and 8.375MHz.
D1~4	Lighting surge protection	
D5	Relay surge voltage absorption	
D6	Switching	8.83MHz filter changeover.
D7~26	Switching	BPF changeover. (D16, 26 : TS-690 only)
D27~30	Switching	AIP changeover.
D31,32	Reverse current prevention	AIP control changeover.
D33	Voltage regulator	5.1V.
D34,35	Reverse current prevention	Bias of TX mixer.
D36,37	Switching	TX/RX changeover of VCO.
D38	Reverse current prevention	For AGC.
D39	Switching	On when RX.
D40~44	Switching	8.83MHz filter changeover.
D45	Switching	On when TX.
D46~49	Switching	8.83MHz filter changeover.
D50	Switching	On when TX.
D51	Switching	On when RX.
D52	Switching	8.83MHz filter changeover.

DESCRIPTION OF COMPONENTS

Ref. No.	Use/Function	Operation/Condition/Compatibility
D53	NB detection	For NB1 and NB2.
D54	Switching	Speed up rise time of RBK.
D55	Switching	8.83MHz filter changeover.
D56	Voltage regulator	5.1V.
D57	Switching	On when RX LO2 (64.22MHz).
D58	Switching	8.83MHz filter changeover.
D59	Switching	On when TX LO2 (64.22MHz).
D61,63	Switching	On when AIP on.
D62,64	Switching	On when AIP off. (TS-690 only)
D501	LED for ON AIR	Active "H".
D502	LED for AT TUNE	Active "H".
D503~511	Reverse current prevention	

FINAL UNIT (X45-3400-XX) : HF 100W -00 : TS-690S -01 : TS-450S

Ref. No.	Use/Function	Operation/Condition/Compatibility
Q1	Pre-drive amplifier	Wide-band amplification of HF band.
Q2,3	Drive amplifier	Push-pull wide-band amplification of HF band.
Q4,5	Final amplifier	Push-pull wide-band amplification of HF band.
Q6	Supply of bias for drive	Temperature compensation of drive.
Q7	Supply of bias for final	Temperature compensation of final.
Q8	Switching	For drive of fan motor when TXB "H".
IC1	AVR	+8V of digital line.
IC2	AVR	+5V.
IC3	AVR	+8V of analog line.
D1	Temperature compensation	Temperature detection of pre-drive.
D2	Temperature compensation	Temperature detection of drive.
D3	Temperature compensation	Temperature detection of final.
D4	Surge absorption	For relay. (TS-690S only)
D5	Surge absorption	For fan motor.
D6	Protection of reverse connection	For power supply terminal.
D7,8	Reverse current prevention	TS-690S only.
TH1	Temperature detection of unit	1/2 : High speed operation of fan motor. 2/2 : Power down.

FINAL UNIT (X45-3420-00) : 50MHz 10W TS-690S ONLY

Ref. No.	Use/Function	Operation/Condition/Compatibility
Q1	Drive amplifier of 50MHz band	
IC1	Final amplifier of 50MHz band	

FINAL UNIT (X45-3430-00) : 50MHz 50W TS-690S ONLY

Ref. No.	Use/Function	Operation/Condition/Compatibility
Q1,2	Final amplifier of 50MHz band	Push-pull amplifier.
Q3	Supply of bias for final	Temperature compensation of final.
Q4	Switching	For drive of fan motor when TXB "H".
D1	Temperature compensation	Temperature detection of final.
D2	Surge absorption	For fan motor.
TH1	Temperature detection of unit	1/2 : High speed operation of fan motor. 2/2 : Power down.

DESCRIPTION OF COMPONENTS

DIGITAL UNIT (X46-312X-XX) 0-11 : TS-690S (K,P) 0-12 : TS-450S (K,P) 0-21 : TS-690S (X,M)
0-22 : TS-450S (X,M) 0-23 : TS-450S (M2) 2-71 : TS-690S (E) 2-72 : TS-450S (E) 2-73 : TS-690S (E2) 2-74 : TS-450S (E2)

Ref. No.	Use/Function	Operation/Condition/Compatibility
Q1	Signal switching	Automatic transmission changeover.
Q2	Signal switching	AT-300 control output (TS).
Q3	Signal switching	AT-300 control output (TT).
Q4	Signal switching	AT-300 control input (TS).
Q5	Signal switching	AT-300 control input (TT).
Q6	Signal switching	AT TUNE LED control.
IC1	CPU	8 bit microprocessor.
IC2	ROM	32K byte.
IC3	RAM	8K byte.
IC4	Address latch	Separate from multiplexer address/data bus output.
IC5	Address decoder	Converts the address signal into a chip select signal for each IC.
IC6,7	I/O port	8 bit x 4, 4 bit x 1, 36 ports.
IC8	Encoder gate array	Pulse count of encoder.
IC9	EEPROM	EEPROM (4096 bit) for memory of mainframe data.
IC10	System reset	Generate reset signal by power supply voltage.
IC11	Reverse logic OR gate	Chip select signal combination for RAM.
IC12	Buffer	Buffer of serial interface (ACC1).
IC13,14	Inverter	Shape waveform of reset signal.
IC15,16	Inverter	Click encoder shape wave.
D1,2	Switching	Select back up power of RAM.
D3	Protection diode	Protection input port from MIC UP switch.
D4	Protection diode	Protection input port from MIC DOWN switch.
D5	Diode for discharge	For discharge of reset voltage.
D6~13	Protection diode	A/D converter input port protection.
D20~27	Switching	Destination selection.

IF UNIT (X48-3090-XX) -00 : TS-690S -01 : TS-450S

Ref. No.	Use/Function	Operation/Condition/Compatibility
Q1	Muting of reception	RBC.
Q2,3	IF amplifier of reception	
Q4,6	Switching	RXB except FM mode, changeover of 455kHz IF filter.
Q5	Switching	RXB when FM mode, changeover of 455kHz IF filter,
Q7	Muting of reception	FM, RBC.
Q8	IF amplifier of reception	
Q9	IF buffer of reception	AM detection, AFC, squelch.
Q10	Buffer for AM detection	
Q11,12	Switching	14V when transmission.
Q13,14	Gain down of reception	When 28MHz band.
Q15		
Q16,17	Gain down of reception	When 50MHz band. (TS-690S only)
Q18	Switching	During transmission of AM, SSB mode, changeover of 455kHz IF filter.
Q19	Mode B	SSBB, CWB.
Q20	Mode B	FMB, FSKB.
Q21	Mode B	AMB, FMNB.
Q22	Noise amplifier	
Q23	FM detection output low-pass filter	De-emphasis.
Q24~27	Squelch switching	
Q28	Switching	Power on of Q29 when RDC is low (DSP when reception).
Q29	Active low-pass filter	Low-pass filter of IF output for DSP-100.
Q30	AF pre-amplifier	
Q31	Muting of reception	Squelch, RBC, RBK.

DESCRIPTION OF COMPONENTS

Ref. No.	Use/Function	Operation/Condition/Compatibility
Q32,33	Amplifier for FM S-meter	
Q34,35	Switching	8V except FM mode (NFMB).
Q36	AGC amplifier	
Q37	Muting	Cut S-meter output during transmission.
Q38,39	dB amplifier	Voltage of dB meter.
Q40	Switching	Squelch.
Q41	Switching	Packet squelch.
Q42	Switching	ON/OFF of relay for external linear amplifier.
Q43	Drive amplifier for modulation	
Q44,45	Switching	8V (NTDB) except DSP transmission mode.
Q46	Switching	8V (TDB) during DSP transmission mode.
Q47	Muting	RLB line to the GND when power on.
Q48	Switching	Delay timing of CKY when CW mode.
Q49	Switching	Off when transmission inhibit.
Q50	Switching	On when TXB. Send transmission signal to mocroprocessor.
Q51	Switching	On when CW mode (changeover CW and without CW.)
Q52	Switching	On when SS line is "L".
Q53	Switching	On when PKS is "L".
Q54	Switching	On when PKS is "L". (VOX line "L")
Q55	Switching	On when VOX is "L".
Q56	Switching	On when key down.
Q57	Muting	On when reception.
Q58	Switching	8V when 50MHz band (50B). (TS-690S only)
Q59	Switching	"FM-N" VR on.
Q60	Mic amplifier	
Q61	Switching	On when AM, FM, PROC.
Q62,63	Switching	On when PROC.
Q64	Muting	Packet, on when reception.
Q65	Switching	8V when packet (PPD).
Q66,67	Switching	On when transmission power 10W (PD10 = 8V).
Q68	Switching	"MIN" VR on.
Q69	Switching	"50W" VR on.
Q70	Switcing	"10W" VR on.
Q71	Switching	"50M 50W" VR on. (TS-690S only)
Q72	Switching	Power supply for TU-8.
Q73	VOX amplifier	
IC1	Product detection	SSB, CW, FSK detection.
IC2	Switching	Changeover for each mode of receiving audio signal.
IC3	Serial data → decimal	Changeover of CWC, SSBC, FSKC, AMC, FMC, FM-NC, IF filter.
IC4	FM IF stage, detection	
IC5	AF power amplifier	
IC6	Meter amplifier	S-meter, ALC meter.
IC7	Switching	Changeover AGC, S-meter.
IC8	Balanced modulator	SSB, AM modulation.
IC9	Analog switch	CW, FM, FSK carrier output.
IC10	Serial data → decimal	
IC11,12	Switching	Timing.
IC13	Analog switch	Mic amplifier output when DSP does not used.
IC14	Analog switch	MA0 (DSP3 connector) output.
IC15	Mic amplifier with ALC.	
IC16	Amplifier	Transmission power control.
D1	Switching	Changeover 455kHz IF filter (reception side).
D2	switching	Changeover 455kHz IF filter (transmission side).
D3,4	Switching	Changeover 455kHz IF filter (12kHz or 6kHz).

DESCRIPTION OF COMPONENTS

Ref. No.	Use/Function	Operation/Condition/Compatibility
D5,6	Switching	Changeover 455kHz IF filter (2.4kHz).
D7,8	Switching	Changeover 455kHz IF filter (500Hz).
D9	Switching	Changeover 455kHz IF filter (reception side, except FM mode).
D10	Switching	Changeover 455kHz IF filter (reception side, FM mode).
D11,12	Switching	Changeover 455kHz IF filter (transmission side).
D13	Switching	Changeover 455kHz IF filter (transmission side when transmitting for DSP use).
D14	Reverse current prevention	FM, RBC.
D15	AM detection	
D16,17	Reverse current prevention	CKY.
D18	Reverse current prevention	CW.
D19	AVR	5V.
D20	Reverse current prevention	TXB.
D21	Rectification	FM noise amplifier output.
D22	Reverse current prevention	AM, SSB.
D23	Reverse current prevention	SSB, CW.
D24	Reverse current prevention	FSK.
D25	Reverse current prevention	FM squelch signal.
D26	Rectification	SSB squelch, AGC.
D27	Reverse current prevention	FM.
D28	Reverse current prevention	Squelch.
D29	Reverse current prevention	RBC, ABK.
D30	Rectification	FM S-meter voltage.
D31	Rectification	dB meter voltage.
D32	Spike absorption	
D33	Reverse current prevention	Upset carrier balance during AM mode.
D34,35	Switching	Carrier output.
D36	Pin diode	Carrier level adjust.
D37	Reverse current prevention	SSB.
D38	Reverse current prevention	Carrier VR voltage.
D39	Reverse current prevention	D34, 35 is on when Q43 is off in FSK mode.
D40	Reverse current prevention	D34, 35 is on when Q43 is off in CW, SSB mode.
D41	Reverse current prevention	
D42	AVR	5V.
D43,44	Switching	Transmission inhibit when power on.
D45	Switching	
D46	Reverse current prevention	SS, VOX, KEY.
D47	Reverse current prevention	TXB.
D48	Reverse current prevention	CW, DELAY.
D49	Reverse current prevention	SS.
D50	Reverse current prevention	CW break-in.
D51	Reverse current prevention	PKS.
D52,53	Reverse current prevention	KEY.
D54	Reverse current prevention	Transmission inhibit when power on (VOX on).
D55	Reverse current prevention	AM,FM.
D56,57	Reverse current prevention	
D58	Reverse current prevention	PROC.
D59	Reverse current prevention	
D60	Rectification	Voltage for ALC.
D61	Reverse current prevention	
D62	Voltage shift	External ALC voltage.
D63	Reverse current prevention	
D64,65	AVR	
D66,67	Reverse current prevention	
D69	Reverse current prevnetion	ALC, S-meter voltage.

DESCRIPTION OF COMPONENTS

Ref. No.	Use/Function	Operation/Condition/Compatibility
D71	Reverse current prevention	28MC.
D72	Reverse current prevention	50MC. (TS-690S only)
D73	Reverse current prevention	

PLL UNIT (X50-3150-XX) -00 : TS-690S -01 : TS-450S

Ref. No.	Use/Function	Operation/Condition/Compatibility
Q1	OSC STD	Reference signal fSTD 20MHz.
Q2	Buffer	fSTD.
Q3	Buffer	20MHz (CAR reference) output.
Q4	Buffer	IC1 frequency divider input.
Q5	Active LPF	10kHz (DSP reference) output.
Q6	Switching	VCO1-A changeover.
Q7	Switching	VCO1-B changeover.
Q8	Switching	VCO1-C changeover.
Q9	Switching	VCO1-D changeover. (TS-690S only)
Q10	VCO1-A	73.08~83.55MHz.
Q11	VCO1-B	83.55~94.55MHz.
Q12	VCO1-C	94.55~113.05MHz.
Q13	VCO1-D	113.05~133.05MHz. (TS-690S only)
Q14	Buffer	VCO1.
Q15	Buffer	LO1 output 73.08~133.05MHz.
Q16	Buffer	IC4 mixer input 73.08~133.05MHz.
Q17	Buffer	PLL IC5 input 6~46MHz.
Q18	Amplifier	PLL IC5 input 6~46MHz.
Q19~21	Active LPF	Comparison 500kHz.
Q22	Switching	"L" when unlock.
Q23	Amplifier	LO2 output 64.22MHz.
Q24~26	Active LPF	Comparison 20kHz (FM : 5kHz).
Q27,29	Switching	PLL IF BPF changeover. (TS-690S only).
Q28	Switching	On when IC4 mixer input 67.05~67.55MHz. (TS-690S only)
Q30	Switching	On when IC4 mixer input 87.05~87.55MHz. (TS-690S only)
Q31	Switching	VCO1 BPF frequency band changeover on when VCO1-A.
IC1,2	Frequency divider	1/4, 1/5, 1/10, 1/10.
IC3	Mixer	1 : 87.05~87.55MHz output. 2 : 67.05~67.55MHz input. 5 : 20MHz input. (TS-690S only)
IC4	Mixer	5 : 73.08~133.05MHz input. 11 : 67.05~67.55MHz or 87.05~87.55MHz input. 13 : 6~46MHz or 26.5~46MHz output.
IC5	PLL	2~4 : Frequency division ratio input. 5 : 5MHz input. 7 : PD output. 8 : UL output ("H" when UL). 14 : 6~46MHz or 26.5~46MHz input.
IC6	PLL	2~4 : Frequency division ratio input. 5 : 5MHz input. 7 : PD output. 8 : UL output ("H" when UL). 12 : 64.22MHz input.
IC7	AVR	+8V (for PLL active LPF, for VCO2 module).
D1	Vari-cap diode	VCO1-A.
D2	Switching	VCO1-A output.
D3	Vari-cap diode	VCO1-B.
D4	Switching	VCO1-B output.
D5	Vari-cap diode	VCO1-C.
D6	Switching	VCO1-C output.
D7	Vari-cap diode	VCO1-D. (TS-690S only)
D8	Switching	VCO1-D output. (TS-690S only).
D9	Switching	UL signal.
D10	Vari-cap diode	VCO1-C.
D11,12	Switching	On when IC4 mixer input 67.05~67.55MHz. (TS-690S only)
D13,14	Switching	On when IC4 mixer input 87.05~87.55MHz. (TS-690S only)

DESCRIPTION OF COMPONENTS

CAR UNIT (X50-3160-00)

Ref. No.	Use/Function	Operation/Condition/Compatibility
Q1	Amplifier	fSTD 20MHz.
Q2	Buffer	D/A buffer (DDS1).
Q3	Buffer	D/A buffer (DDS2).
Q4	Buffer	CAR output 455kHz.
Q5	Buffer	IC4 mixer input 8.375MHz.
Q6	Amplifier	Triplication 60MHz.
Q7	OSC	LO3 signal 8.375MHz.
Q8	Buffer	LO3 output 8.375MHz.
Q9	Buffer	DLO output 67.05~67.55MHz.
IC1	DDS	DLO 1.325~0.825MHz.
IC2	DDS	CAR, FSK modulation 455kHz.
IC3	Buffer	Inverter fSTD.
D1	Switching	RTK.

FILTER UNIT (X51-3110-XX)

-00 : TS-690S (K,X,P,E,E2) -01 : TS-450S (K,X,P,E,E2) -21 : TS-690S (M) -22 : TS-450S (M,M2)

Ref. No.	Use/Function	Operation/Condition/Compatibility
Q1	Relay driver	21.5~30.5MHz LPF relay.
Q2	Relay driver	25.0~30.5MHz AT coil tap relay.
IC1	Band data decoder	
IC2	Relay driver	
D1	Surge absorption	0.3~2.5MHz LPF relay.
D2	Surge absorption	2.5~4.0MHz LPF relay.
D3	Surge absorption	4.0~7.5MHz LPF relay.
D4	Surge absorption	7.5~10.5MHz LPF relay. (M,M2 only)
D5	Surge absorption	10.5~14.5MHz LPF relay.
D6	Surge absorption	14.5~21.5MHz LPF relay.
D7	Surge absorption	21.5~30.5MHz LPF relay.
D8	Surge absorption	30.5~60MHz LPF relay. (TS-690S only)
D9	High frequency rectification	Reflected wave rectification.
D10	High frequency rectification	Forward wave rectification.
D11	Lightning surge absorption	For ANT1 (HF/50MHz band).
D12	Lightning surge absorption	For ANT2 (50MHz band). (TS-690S only).
D13	Surge absorption	TX/RX changeover relay.
D14	Surge absorption	ANT1/ANT2 changeover relay. (TS-690S only)
D15	Voltage stabilization	+5V stabilization.
D16	Reverse current prevention	
D17,18	Reverse current prevention	(Except M,M2)

AT UNIT/AT-450 (X53-3370-00)

Ref. No.	Use/Function	Operation/Condition/Compatibility
Q1,2	Amplifier	Waveform shaping.
Q3	Switching	On when APRE "H".
Q4,5	Switching	Motor speed control pulse.
Q6	Switching	K1 relay changeover.
IC1	D-FF	Phase difference detection
IC2	Analog switch	For control changeover motor 1.
IC3	Analog switch	For control changeover motor 2.
IC4	Motor drive	For motor 1.
IC5	Motor drive	For motor 2.
IC6	Comparator	Amplification difference detection.

TS-450S/690S

DESCRIPTION OF COMPONENTS

Ref. No.	Use/Function	Operation/Condition/Compatibility
D1	Detection	Current component amplification detection.
D2	Detection	Voltage component amplification detection.
D3~8	Switching	Clipper.
D9	Switching	Spike absorption.
D101~106	Switching	Spike absorption.

VCO2 (X58-3390-03)

Ref. No.	Use/Function	Operation/Condition/Compatibility
Q1	VCO0 (PLL0)	64.22MHz
Q2	VCO0 buffer	
D1	VCO0 frequency viable	

SIDE TONE (X59-1060-00)

Ref. No.	Use/Function	Operation/Condition/Compatibility
Q1	SIDE TONE oscillation	800Hz.
D1	Switching	Turned ON when KEY DOWN.
D2	Prevention of reverse current	
D3	Temperature compensation	

VOX (X59-1080-00)

Ref. No.	Use/Function	Operation/Condition/Compatibility
IC1 (1/2)	Comparison of VOX level	
IC1 (2/2)	Comparison of ANTI VOX level	
IC2	NOR circuit (RS flip-flop)	
Q1	Switching transistor	Q1 is ON when IC2/11pin is "H"
D1,2	Prevention of reverse current	

FM MIC AMP (X59-3000-03)

Ref. No.	Use/Function	Operetion/Condition/Compatibility
IC1 (1/2)	Low-pass filter	1,2 : Output
IC1 (2/2)	Limitting amplifier	6 : Input 7 : Output
Q1	SUB TONE	

NOTCH (X59-3030-00)

Ref. Mo.	Use/Function	Operation/Cndition/Compatibility
IC1	Active BPF NOTCH gain compensation amplifier	

NB2 (X59-3350-00)

Ref. No.	Use/Function	Operation/Condition/Compatibility
IC1	One-shot multi vibrator	Synchronized to pulse, with width of 1/4,4/4 : 5mS and 2/4,3/4 : 40mS.
Q1	Switching transistor	Turned ON when pulse is 15mS.
Q2	Switching transistor	Turned OFF when pulse is 40mS.

DESCRIPTION OF COMPONENTS

TRX (X59-3680-01)

Ref. No.	Use/Function	Operation/Condition/Compatibility
Q151	Switching	Receive voltage supply.
Q152	Switching	Transmitter voltage supply.
Q153	Switching	Transmitter.
Q154,155	Switching	Receive.

SELECT (X59-3920-00)

Ref. No.	Use/Function	Operation/Condition/Compatibility
IC1	Analog switch	Changeover of notch, flat signal, changeover AF signal for DSP.

BK-IN (X59-3930-00)

Ref. No.	Use/Function	Operation/Condition/Compatibility
Q1	Switching	Time constant changeover when CW.
IC1	Inverter	
IC2	NAND	RBC.
IC3	NAND	$\overline{\text{CKY}}$.
D1	Discharge	Discharge of C1.
D2	Discharge	Discharge of C3.
D3	Reverse current prevention	

METER (X59-3940-00)

Ref. No.	Use/Function	Operation/Condition/Compatibility
IC1	Amplifier	For VSF, VSR.
D1,2	Reverse current prevention	

TS-450S/690S

PARTS LIST

* New Parts
Parts without Parts No. are not supplied.
Les articles non mentionnes dans le Parts No. ne sont pas fournis.
Teile ohne Parts No. werden nicht geliefert.

TS-450S/690S

Ref. No. 参照番号	Address 位置	New Parts 新	Parts No. 部品番号	Description 部品名／規格	Destination 仕向	Remarks 備考
			TS-450S/690S			
1	1B	*	A01-2028-02	METALLIC CABINET(TOP)		
2	3B	*	A01-2029-02	METALLIC CABINET(BOTTOM)		
4	3B		A40-0630-13	BOTTOM PLATE		
10	2G	*	A62-0102-03	PANEL	450S	
10	2G	*	A62-0109-03	PANEL	690S	
14	2G	*	A62-0099-02	PANEL ASSY	450S	
14	2G	*	A62-0106-02	PANEL ASSY	690S	
22	3D	*	A82-0004-04	REAR PANEL	450/AT	
23	2G	*	B10-1167-13	FRONT GLASS		
24	2H		B11-0466-04	FILTER		
25	1I	*	B38-0361-05	LCD ASSY		
-	-		B42-1729-04	LABEL(WITH AT)	450/AT	
27	3B		B42-3343-04	LABEL(S/NO)		
28	2F	*	B42-3464-04	LABEL(REAR)		
29	2J	*	B42-3465-04	LABEL		
30	3O	*	B44-2163-04	LABEL(UPC CORD)		
34	1P		B46-0410-30	WARRANTY CARD	K	
34	1P		B46-0419-00	WARRANTY CARD	EE2	
34	1P		B46-0422-00	WARRANTY CARD	P	
37	1P	*	B62-0095-00	INSTRUCTION MANUAL	KX	
37	1P	*	B62-0096-00	INSTRUCTION MANUAL	MM2P	
37	1P	*	B62-0096-00	INSTRUCTION MANUAL	EE2	
37	1P	*	B62-0097-00	INSTRUCTION MANUAL	EE2	
40	3B	*	B72-0352-04	MODEL NAME PLATE (690S)	K	
38	1P	*	B62-0099-00	INSTRUCTION MANUAL(COMMAND)		
40	3B	*	B72-0178-04	MODEL NAME PLATE (450S/AT)	XPEE2MM2	
40	3B	*	B72-0182-04	MODEL NAME PLATE (690S)	XPEE2M	
40	3B	*	B72-0353-04	MODEL NAME PLATE (450S/AT)	K	
48	1K		E04-0167-05	RF COAXIAL CABLE RECEPTACLE		
49	1O		E07-0751-05	7P DIN PLUG ASSY (ACSY)		
50	1O		E07-1351-05	13P ROUND PLUG ASSY(ACSY)		
51	1K	*	E23-0677-04	GND TERMINAL		
52	1O		E30-3035-05	DC CABLE		
54	1O		E31-2154-05	CONNECTING WIRE(CAL)		
-			E31-3301-05	CONNECTING WIRE		
-			E31-6066-05	FLAT CABLE		
-			E37-0234-05	FLAT CABLE		
-		*	E33-1951-35	FINISHED WIRE SET		
-		*	E37-0193-05	FLAT CABLE (PLL-GIG)		
-		*	E37-0194-05	FLAT CABLE (RF/SW-DIG)		
-		*	E37-0195-05	FLAT CABLE (DIS-DIG,RF-DIG)		
-		*	E37-0196-05	CONNECTING WIRE (PLL-RF/LO1)		
-		*	E37-0197-05	CONNECTING WIRE (PLL-RF/LO2)		
-		*	E37-0198-05	CONNECTING WIRE (CAR-PLL/20M)		
-		*	E37-0199-15	CONNECTING WIRE (PLL/8-CAR/5)		
-		*	E37-0200-05	CONNECTING WIRE (50M 10W/690S)		
-		*	E37-0208-05	FLAT CABLE (RF-IF)		
-		*	E37-0225-05	CONNECTING WIRE (CAR-PLL/DLO)		
-		*	E37-0227-05	CONNECTING WIRE (RF-FILTER)		
77	1O		F06-4029-05	FUSE (4A ACSY)		
80	1F	*	F09-0429-05	FAN (HP)		
81	2B	*	F10-1490-03	SHIELDING PLATE (FILTER)	450S	
81	2B	*	F10-1492-03	SHIELDING PLATE (FILTER)	690S	
82	1E	*	F10-1491-02	SHIELDING PLATE (FINAL)	450S	

L:Scandinavia K:USA P:Canada
Y:PX(Far East, Hawaii) T:England E:Europe
Y:AAFES(Europe) X:Australia M:Other Areas

TS-450S : K,X,P,E,E2,M,M2
TS-690S : K,X,P,E,E2,M

⚠ indicates safety critical components.

PARTS LIST

* New Parts
Parts without Parts No. are not supplied.
Les articles non mentionnes dans le Parts No. ne sont pas fournis.
Teile ohne Parts No. werden nicht geliefert.

TS-450S/690S

Ref. No. 参照番号	Address 位置	New Parts 新	Parts No. 部品番号	Description 部品名／規格	Destination 仕向	Remarks 備考
83	2K	*	F10-1493-02	SHIELDING PLATE (FINAL)	690S	
84	1E	*	F10-1494-03	SHIELDING PLATE (PLL)		
85	1E	*	F10-1495-03	SHIELDING PLATE (CAR)		
86	3K	*	F10-1496-03	SHIELDING PLATE (10W 50M)	690S	
87	1F	*	F10-2011-03	SHIELDING PLATE (FAN)		
88	1K	*	F20-1071-04	INSULATING BOARD(FILTER)		
-			F51-0011-05	FUSE(6X30MM) (25A)		
90	1O		F51-0011-05	FUSE(6X30MM) (25A ACSY)		
92	3A		G02-0505-05	SPRING		
93	1A		G10-0656-04	NON-WOVEN FABRIC(SP)		
-			G11-0609-04	CUSHION		
95	3E		G13-0831-04	CUSHION (TU-8)		
-			G13-0855-04	CUSHION		
97	1G	*	G13-1321-04	CUSHION (KNOB)		
98	2H	*	G13-1322-04	CUSHION (KNOB)		
99	1A	*	G13-1323-14	CUSHION (SP)		
100	2O	*	H10-2727-02	POLYSTYRENE FOAMED FIXTURE(F)		
101	2P	*	H10-2728-02	POLYSTYRENE FOAMED FIXTURE(R)		
102	1P		H12-1315-04	PACKING FIXTURE		
-			H13-0860-04	PROTECTION BOARD		
103	2P	*	H20-1440-03	PROTECTION COVER		
104	1O		H25-0079-04	PROTECTION BAG	KPMM2X	
105	1O		H25-0112-04	PROTECTION BAG (DC CABLE)		
106	1O		H25-0029-04	PROTECTION BAG		
110	3O	*	H52-0121-04	ITEM CARTON BOX (450SAT)	KXPMM2	
110	3O	*	H52-0125-04	ITEM CARTON BOX (450S)	KXPMM2	
110	3O	*	H52-0129-04	ITEM CARTON BOX (690S)	KXPM	
110	3O	*	H52-0209-04	ITEM CARTON BOX (450SAT)	E,E2	
110	3O	*	H52-0210-04	ITEM CARTON BOX (450S)	E,E2	
110	3O	*	H52-0211-04	ITEM CARTON BOX (690S)	E,E2	
111	3P	*	H62-0107-04	OUTER PACKING CASE(450SAT)	KXPMM2	
111	3P	*	H62-0108-04	OUTER PACKING CASE(450S)	KXPMM2	
111	3P	*	H62-0109-04	OUTER PACKING CASE(690S)	KXPM	
111	3P	*	H62-0181-04	OUTER PACKING CASE(450SAT)	E,E2	
111	3P	*	H62-0182-04	OUTER PACKING CASE(450S)	E,E2	
111	3P	*	H62-0183-04	OUTER PACKING CASE(690S)	E,E2	
114	3B		J02-0323-05	FOOT (R)		
115	3A		J02-0440-04	FOOT (SUB)		
116	1A		J02-0441-05	FOOT (SMALL)		
117	3A		J02-0442-04	FOOT (F)		
-			J13-0414-05	FUSE HOLDER		
121	3A,3B		J21-4208-04	MOUNTING HARDWARE(SUB-FOOT)		
122	2H		J31-0141-04	COLLAR (MIC)		
-			J61-0307-05	WIRE BAND		
124	1B		K01-0416-05	HANDLE		
126	3A	*	K21-0791-02	KNOB (MAIN)		
127	1O		K23-0712-04	KNOB (VOX,ACSY)		
130	2G		K29-3173-04	KNOB(BUTTON)		
131	2G		K29-4505-04	KNOB(BUTTON) (M.IN)		
132	2G		K29-4506-04	KNOB(BUTTON) (M.VFO)		
133	2G		K29-4507-04	KNOB(BUTTON) (SCAN)		
134	2G		K29-4508-04	KNOB(BUTTON) (DOWN)		
135	2G		K29-4509-04	KNOB(BUTTON) (UP)		
136	3A		K29-4515-04	KNOB (INSIDE)		

L:Scandinavia K:USA P:Canada
Y:PX(Far East, Hawaii) T:England E:Europe
Y:AAFES(Europe) X:Australia M:Other Areas

TS-450S : K,X,P,E,E2,M,M2
TS-690S : K,X,P,E,E2,M

⚠ indicates safety critical components.

TS-450S/690S

PARTS LIST

* New Parts
Parts without Parts No. are not supplied.
Les articles non mentionnes dans le Parts No. ne sont pas fournis.
Teile ohne Parts No. werden nicht geliefert.

TS-450S/690S

Ref. No. 参照番号	Address 位置	New Parts 新	Parts No. 部品番号	Description 部品名／規格	Destination 仕向	Remarks 備考
137	3A		K29-4516-04	KNOB (OUTSIDE)		
138	2G		K29-4611-03	KNOB(BUTTON) (1)		
139	2G		K29-4612-03	KNOB(BUTTON) (2)		
140	2G		K29-4613-03	KNOB(BUTTON) (3)		
141	2G		K29-4614-03	KNOB(BUTTON) (4)		
142	2G		K29-4615-03	KNOB(BUTTON) (5)		
143	2G		K29-4616-03	KNOB(BUTTON) (6)		
144	2G		K29-4617-03	KNOB(BUTTON) (7)		
145	2G		K29-4618-03	KNOB(BUTTON) (8)		
146	2G		K29-4619-03	KNOB(BUTTON) (9)		
147	2G		K29-4620-03	KNOB(BUTTON) (0)		
148	2G		K29-4621-03	KNOB(BUTTON) (CLR)		
149	2G		K29-4622-03	KNOB(BUTTON) (ENT)		
150	2G		K29-4626-03	KNOB(BUTTON) (VOICE)		
151	2G		K29-4630-03	KNOB(BUTTON) (F.LOCK)		
152	2G		K29-4633-03	KNOB(BUTTON) (LSB/USB)		
153	2G		K29-4634-03	KNOB(BUTTON) (CW/FSK)		
154	2G		K29-4635-03	KNOB(BUTTON) (FM/AM)		
155	2A		K29-4636-04	KNOB (POWER)		
156	3A		K29-4682-14	KNOB (MIC ETC.)		
157	1G	*	K29-4688-04	KNOB (SEND/REC)		
158	2G	*	K29-4689-03	KNOB(BUTTON) (TF/SET)		
159	2G	*	K29-4690-03	KNOB(BUTTON) (M/V)		
160	2G	*	K29-4691-03	KNOB(BUTTON) (RIT)		
161	2G	*	K29-4692-03	KNOB(BUTTON) (XIT)		
162	2G	*	K29-4693-03	KNOB(BUTTON) (A/B)		
163	2G	*	K29-4694-03	KNOB(BUTTON) (SPLIT)		
164	2G	*	K29-4695-03	KNOB(BUTTON) (A=B)		
165	2G	*	K29-4696-03	KNOB(BUTTON) (1MHZ)		
166	3G	*	K29-4697-14	KNOB (M.CH)		
167	2A	*	K29-4714-08	KNOB RING (MAIN)		
A	3K	*	N09-0623-05	SCREW (50M MODULE)	690S	
B	2E,3E		N09-2051-05	SCREW (DIG)	X	
C	2K		N15-1040-46	FLAT WASHER (GND)		
D	2G		N19-0637-04	FLAT WASHER (PANEL)		
E	1H,1I		N32-2604-46	FLAT HEAD MACHINE SCREW		
F	1H,1I		N32-2606-46	FLAT HEAD MACHINE SCREW		
G	2C,3C		N32-3005-46	FLAT HEAD MACHINE SCREW(SUB-PA		
H	1H		N32-3016-46	FLAT HEAD MACHINE SCREW(POW.SW		
I	1A		N33-3006-41	OVAL HEAD MACHINE SCREW(CABINE		
J	1F		N35-3004-46	BINDING HEAD MACHINE SCREW(FAN		
K	1F,2M		N35-3018-46	BINDING HEAD MACHINE SCREW(FAN		
L	2K		N35-4010-46	BINDING HEAD MACHINE SCREW(GND		
M	1E		N87-2606-46	BRAZIER HEAD TAPTITE SCREW		
N	1A,1J		N87-3006-46	BRAZIER HEAD TAPTITE SCREW		
O	3A,2D		N87-3008-46	BRAZIER HEAD TAPTITE SCREW		
P	2F		N88-3006-46	FLAT HEAD TAPTITE SCREW(AT UNI		
Q	1B		N89-3006-45	BINDING HEAD TAPTITE SCREW(FIL		
R	2A		N90-3008-46	TP HEAD MACHINE SCREW(PANEL)		
170	1H		S40-2460-05	PUSH SWITCH (POWER)		
-			S50-1406-05	TACT SWITCH		
175	2A		T07-0252-15	SPEAKER		
180	1O		T91-0352-15	MICROPHONE		

L:Scandinavia K:USA P:Canada
Y:PX(Far East, Hawaii) T:England E:Europe
Y:AAFES(Europe) X:Australia M:Other Areas

TS-450S : K,X,P,E,E2,M,M2
TS-690S : K,X,P,E,E2,M

⚠ indicates safety critical components.

PARTS LIST

* New Parts
Parts without Parts No. are not supplied.
Les articles non mentionnes dans le Parts No. ne sont pas fournis.
Teile ohne Parts No. werden nicht gellefert.

TS-450S/690S
SWITCH UNIT (X41-3170-00)
RF UNIT (X44-3130-XX)

Ref. No. 参照番号	Address 位置	New Parts 新	Parts No. 部品番号	Description 部品名／規格	Destination 仕向	Remarks 備考
IC1 ,2			LC7582	IC(LCD DRIVER) (LCD ASSY)		
185	1E		W02-0855-05	ENCODER		
200	2H,3I	*	X41-3170-00	SWITCH UNIT		
201	3F,1H	*	X44-3130-00	RF UNIT	690S	
201	3F,1H	*	X44-3130-01	RF UNIT	450S	
203	2K	*	X45-3400-00	FINAL UNIT	690S	
203	2K	*	X45-3400-01	FINAL UNIT	450S	
205	3K	*	X45-3420-00	FINAL UNIT/50M 10W	690S	
206	2D	*	X45-3430-00	FINAL UNIT/50M 25,50W	690S	
208	2E	*	X46-3120-11	DIGITAL UNIT (690S)	KP	
208	2E	*	X46-3120-12	DIGITAL UNIT (450S)	KP	
208	2E	*	X46-3120-21	DIGITAL UNIT (690S)	MX	
208	2E	*	X46-3120-22	DIGITAL UNIT (450S)	MX	
208	2E	*	X46-3120-23	DIGITAL UNIT (450S)	M2	
208	2E	*	X46-3122-71	DIGITAL UNIT (690S)	E	
208	2E	*	X46-3122-72	DIGITAL UNIT (450S)	E	
208	2E	*	X46-3122-73	DIGITAL UNIT (690S)	E2	
208	2E	*	X46-3122-74	DIGITAL UNIT (450S)	E2	
209	3E	*	X48-3090-00	IF UNIT	690S	
209	3E	*	X48-3090-01	IF UNIT	450S	
210	2E	*	X50-3150-00	PLL UNIT	690S	
210	2E	*	X50-3150-01	PLL UNIT	450S	
211	1E	*	X50-3160-00	CAR UNIT		
212	1J	*	X51-3110-00	FILTER UNIT (690S)	KXPEE2	
212	1J	*	X51-3110-01	FILTER UNIT (450S)	KXPEE2	
212	1J	*	X51-3110-21	FILTER UNIT (690S)	M	
212	1J	*	X51-3110-22	FILTER UNIT (450S)	MM2	
215	2L	*	X53-3370-00	AT UNIT (450SAT)		
SWITCH UNIT (X41-3170-00)						
CN1			E40-3300-05	PIN ASSY (3P)		
CN2			E40-3303-05	PIN ASSY (6P)		
CN3			E40-3306-05	PIN ASSY (9P)		
CN4		*	E40-3305-05	PIN ASSY (8P)		
CN5 ,6			E40-3300-05	PIN ASSY (3P)		
CN7			E40-3299-05	PIN ASSY (2P)		
J1			E11-0437-05	PHONE JACK (PHONE)		
R1 ,2			RD14CB2E101J	RD 100 J 1/4W		
VR1		*	R24-1402-05	POTENTIOMETER (NOTCH/SQ)		
VR2		*	R19-3433-05	POTENTIOMETER (AF/RF)		
VR3		*	R05-3462-05	POTENTIOMETER (MIC)		
VR4		*	R05-2404-05	POTENTIOMETER (PWR)		
VR5		*	R05-3463-05	POTENTIOMETER (CAR)		
VR6		*	R05-6403-05	POTENTIOMETER (DELAY)		
VR7		*	R19-3434-05	POTENTIOMETER (RIT/XIT,IF SET		
S1		*	W02-1687-05	ENCODER (SUB)		
RF UNIT (X44-3130-XX) -00 : TS-690S -01 : TS-450S						
C1			CK73FB1E103K	CHIP C 0.01UF K		
C2			CC73FCH1H470J	CHIP C 47PF J		
C3			CC73FCH1H150J	CHIP C 15PF J		
C4			CC73FCH1H820J	CHIP C 82PF J		
C5			CC73FCH1H560J	CHIP C 56PF J		

L:Scandinavia K:USA P:Canada
Y:PX(Far East, Hawaii) T:England E:Europe
Y:AAFES(Europe) X:Australia M:Other Areas

TS-450S : K,X,P,E,E2,M,M2
TS-690S : K,X,P,E,E2,M

⚠ indicates safety critical components.

PARTS LIST

* New Parts
Parts without Parts No. are not supplied.
Les articles non mentionnes dans le Parts No. ne sont pas fournis.
Teile ohne Parts No. werden nicht gellefert.

RF UNIT (X44-3130-XX)

Ref. No. 参照番号	Address 位置	New Parts 新	Parts No. 部品番号	Description 部品名／規格	Destination 仕向	Remarks 備考
C6			CC73FCH1H330J	CHIP C 33PF J		
C7 ,8			CK73FF1E104Z	CHIP C 0.1UF Z		
C9			CK73FF1C105Z	CHIP C 1.0UF Z		
C10			CK73FF1E104Z	CHIP C 0.1UF Z		
C11			CK73FB1E103K	CHIP C 0.01UF K		
C12			CK73FB1E223K	CHIP C 0.022UF K		
C13			CK73FB1E103K	CHIP C 0.01UF K		
C14			CK73FF1C105Z	CHIP C 1.0UF Z		
C15			CK73FF1E104Z	CHIP C 0.1UF Z		
C16			CK73FB1H222K	CHIP C 2200PF K		
C17			CK73FB1H682K	CHIP C 6800PF K		
C18			CK73FB1H222K	CHIP C 2200PF K		
C19			CK73FF1C105Z	CHIP C 1.0UF Z		
C20 ,21			CK73FF1E104Z	CHIP C 0.1UF Z		
C22			CK73FB1H472K	CHIP C 4700PF K		
C23			CK73FF1E104Z	CHIP C 0.1UF Z		
C24			CK73FB1H102K	CHIP C 1000PF K		
C25			CC73FSL1H821J	CHIP C 820PF J		
C26			CK73FB1H472K	CHIP C 4700PF K		
C27			CK73FF1E104Z	CHIP C 0.1UF Z		
C28			CK73FB1H102K	CHIP C 1000PF K		
C29 ,30			CK73FB1E103K	CHIP C 0.01UF K		
C31			CK73FF1E104Z	CHIP C 0.1UF Z		
C32			CK73FB1H222K	CHIP C 2200PF K		
C33			CK73FF1E104Z	CHIP C 0.1UF Z		
C34			CK73FB1H102K	CHIP C 1000PF K		
C35			CC73FSL1H471J	CHIP C 47PF J		
C36			CK73FB1H222K	CHIP C 2200PF K		
C37			CK73FF1E104Z	CHIP C 0.1UF Z		
C38 ,39			CK73FB1H102K	CHIP C 1000PF K		
C40			CK73FF1E104Z	CHIP C 0.1UF Z		
C41			CK73FB1H102K	CHIP C 1000PF K		
C42			CC73FSL1H331J	CHIP C 330PF J		
C43			CK73FB1H102K	CHIP C 1000PF K		
C44			CK73FF1E104Z	CHIP C 0.1UF Z		
C45 ,46			CK73FB1H102K	CHIP C 1000PF K		
C47			CK73FF1E104Z	CHIP C 0.1UF Z		
C48			CK73FB1H102K	CHIP C 1000PF K		
C49			CC73FSL1H121J	CHIP C 120PF J		
C50			CK73FB1H102K	CHIP C 1000PF K		
C51			CK73FF1E104Z	CHIP C 0.1UF Z		
C52			CK73FB1H102K	CHIP C 1000PF K		
C53			CC73FSL1H821J	CHIP C 820PF J		
C54			CK73FF1E104Z	CHIP C 0.1UF Z		
C55			CK73FB1H102K	CHIP C 1000PF K		
C56			CC73FCH1H820J	CHIP C 82PF J		
C57			CC73FSL1H821J	CHIP C 820PF J		
C58			CK73FF1E104Z	CHIP C 0.1UF Z		
C59			CK73FB1H102K	CHIP C 1000PF K		
C60			CC73FSL1H391J	CHIP C 390PF J		
C61			CK73FF1E104Z	CHIP C 0.1UF Z		
C62			CK73FB1H102K	CHIP C 1000PF K		
C63			CC73FCH1H820J	CHIP C 82PF J		
C64			CC73FSL1H271J	CHIP C 270PF J		
C65			CK73FF1E104Z	CHIP C 0.1UF Z		

L:Scandinavia K:USA P:Canada
Y:PX(Far East, Hawaii) T:England E:Europe
Y:AAFES(Europe) X:Australia M:Other Areas

TS-450S : K,X,P,E,E2,M,M2
TS-690S : K,X,P,E,E2,M

⚠ indicates safety critical components.

PARTS LIST

× New Parts
Parts without Parts No. are not supplied.
Les articles non mentionnes dans le Parts No. ne sont pas fournis.
Teile ohne Parts No. werden nicht gellefert.

RF UNIT (X44-3130-XX)

Ref. No. 参照番号	Address 位置	New Parts 新	Parts No. 部品番号	Description 部品名／規格			Destination 仕向	Remarks 備考
C66			CK73FB1H102K	CHIP C	1000PF	K		
C67			CC73FSL1H221J	CHIP C	220PF	J		
C68			CK73FF1E104Z	CHIP C	0.1UF	Z		
C69			CC73FCH1H680J	CHIP C	68PF	J		
C70			CK73FF1E104Z	CHIP C	0.1UF	Z		
C71			CK73FB1H102K	CHIP C	1000PF	K		
C72			CC73FCH1H330J	CHIP C	33PF	J		
C73			CC73FCH1H220J	CHIP C	22PF	J		
C74			CK73FB1H222K	CHIP C	2200PF	K		
C75 ,76			CK73FF1E104Z	CHIP C	0.1UF	Z		
C77			CK73FB1H102K	CHIP C	1000PF	K		
C78 ,79			CK73FF1E104Z	CHIP C	0.1UF	Z		
C80			CC73FSL1H151J	CHIP C	150PF	J	690S	
C81			CK73FF1E104Z	CHIP C	0.1UF	Z	690S	
C82			CK73FB1H102K	CHIP C	1000PF	K	690S	
C83			CC73FCH1H270J	CHIP C	27PF	J	690S	
C84			CK73FF1E104Z	CHIP C	0.1UF	Z	690S	
C85			CK73FB1H102K	CHIP C	1000PF	K	690S	
C86			CC73FCH1H120J	CHIP C	12PF	J	690S	
C87			CK73FB1H102K	CHIP C	1000PF	K	690S	
C88			CK73FF1E104Z	CHIP C	0.1UF	Z	690S	
C89			CC73FCH1H270J	CHIP C	27PF	J	690S	
C90 ,91			CK73FB1H182K	CHIP C	1800PF	K		
C92			CK73FB1H472K	CHIP C	4700PF	K		
C93			CK73FB1H102K	CHIP C	1000PF	K	690S	
C94 ,95			CK73FF1E104Z	CHIP C	0.1UF	Z	690S	
C96			CC73FCH1H820J	CHIP C	82PF	J		
C97 ,98			CK73FF1E104Z	CHIP C	0.1UF	Z		
C99			CK73FB1E103K	CHIP C	0.01UF	K		
C100			CK73FF1E104Z	CHIP C	0.1UF	Z		
C101			CK73FB1E103K	CHIP C	0.01UF	K		
C102			CK73FF1E104Z	CHIP C	0.1UF	Z		
C103			CK73FF1C105Z	CHIP C	1.0UF	Z		
C104			CK73FF1E104Z	CHIP C	0.1UF	Z		
C105			CK73FF1C105Z	CHIP C	1.0UF	Z		
C106			CK73FF1E104Z	CHIP C	0.1UF	Z		
C107			CC73FCH1H101J	CHIP C	100PF	J		
C108			CC73FCH1H150J	CHIP C	15PF	J		
C109			CC73FCH1H820J	CHIP C	82PF	J		
C110			CC73FCH1H470J	CHIP C	47PF	J		
C111			CC73FCH1H330J	CHIP C	33PF	J		
C112-114			CK73FF1E104Z	CHIP C	0.1UF	Z		
C115			CC73FCH1H180J	CHIP C	18PF	J		
C116			CK73FB1H103K	CHIP C	0.010UF	K		
C117			CC73FCH1H020C	CHIP C	2.0PF	C		
C118,119			CC73FCH1H010C	CHIP C	1PF	C		
C120			CK73FF1E104Z	CHIP C	0.1UF	Z		
C121			CC73FSL1H471J	CHIP C	470PF	J		
C122			CE04EW1C220M	ELECTRO	22UF	16WV		
C123-127			CK73FF1E104Z	CHIP C	0.1UF	Z		
C128			CK73FF1E104Z	CHIP C	0.1UF	Z		
C129			CK73FB1E103K	CHIP C	0.01UF	K		
C130			CC73FCH1H010C	CHIP C	1PF	C		
C131			CC73FCH1H0R5C	CHIP C	0.5PF	C		
C132			CC73FCH1H060D	CHIP C	6PF	D		

L:Scandinavia K:USA P:Canada
Y:PX(Far East, Hawaii) T:England E:Europe
Y:AAFES(Europe) X:Australia M:Other Areas

TS-450S : K,X,P,E,E2,M,M2
TS-690S : K,X,P,E,E2,M

⚠ indicates safety critical components.

PARTS LIST

× New Parts
Parts without Parts No. are not supplied.
Les articles non mentionnes dans le Parts No. ne sont pas fournis.
Teile ohne Parts No. werden nicht geliefert.

RF UNIT (X44-3130-XX)

Ref. No. 参照番号	Address 位置	New Parts 新	Parts No. 部品番号	Description 部品名／規格			Destination 仕向	Remarks 備考
C133,134			CC73FCH1H050D	CHIP C	5.0PF	D		
C135			CC73FCH1H0R5C	CHIP C	0.5PF	C		
C136			CC73FCH1H020C	CHIP C	2.0PF	C		
C137,138			CK73FF1E104Z	CHIP C	0.1UF	Z		
C139			CK73FB1H102K	CHIP C	1000PF	K		
C140			CE04EW1E4R7M	ELECTRO	4.7UF	25WV		
C141,142			CK73FB1H102K	CHIP C	1000PF	K		
C143-145			CK73FF1E104Z	CHIP C	0.1UF	Z		
C146-148			CC73FCH1H0R5C	CHIP C	0.5PF	C		
C149			CK73FF1E104Z	CHIP C	0.1UF	Z		
C150-154			CK73FB1H102K	CHIP C	1000PF	K		
C155			CE04EW1E470M	ELECTRO	47UF	25WV		
C156,157			CK73FB1H102K	CHIP C	1000PF	K		
C158			CK73FB1H472K	CHIP C	4700PF	K		
C159			CK73FB1H102K	CHIP C	1000PF	K		
C160			CK73FB1H472K	CHIP C	4700PF	K		
C161,162			CK73FF1E104Z	CHIP C	0.1UF	Z		
C163			CK73FB1H102K	CHIP C	1000PF	K		
C164			CK73FF1E104Z	CHIP C	0.1UF	Z		
C165,166			CK73FB1E103K	CHIP C	0.01UF	K		
C167			CK73FB1H102K	CHIP C	1000PF	K		
C168-173			CK73FB1E103K	CHIP C	0.01UF	K		
C174			CK73FB1E223K	CHIP C	0.022UF	K		
C175			CK73FB1H102K	CHIP C	1000PF	K		
C176			CK73FB1E103K	CHIP C	0.01UF	K		
C177			CK73FB1H102K	CHIP C	1000PF	K		
C178			CK73FB1E103K	CHIP C	0.01UF	K		
C179			CC73FCH1H150J	CHIP C	15PF	J		
C180-181			CK73FB1E103K	CHIP C	0.01UF	K		
C182-191			CK73FB1E103K	CHIP C	0.01UF	K		
C192-195			CK73FB1H102K	CHIP C	1000PF	K		
C196			CK73FF1E104Z	CHIP C	0.1UF	Z		
C197			CE04EW1C100M	ELECTRO	10UF	16WV		
C198			CK73FB1E103K	CHIP C	0.01UF	K		
C199-201			CK73FB1H102K	CHIP C	1000PF	K		
C202			CE04EW1A101M	ELECTRO	100UF	10WV		
C203			CK73FF1E104Z	CHIP C	0.1UF	Z		
C204			CC73FCH1H100D	CHIP C	10PF	D		
C205			CK73FB1E103K	CHIP C	0.01UF	K		
C206			CK73FF1E104Z	CHIP C	0.1UF	Z		
C207			CC73FCH1H220J	CHIP C	22PF	J		
C208			CK73FB1E103K	CHIP C	0.01UF	K		
C209			CC73FCH1H220J	CHIP C	22PF	J		
C210			CK73FB1E103K	CHIP C	0.01UF	K		
C211			CE04EW1H010M	ELECTRO	1.0UF	50WV		
C212,213			CK73FB1E103K	CHIP C	0.01UF	K		
C214,215			CK73FF1E104Z	CHIP C	0.1UF	Z		
C216			CK73FF1E104Z	CHIP C	0.1UF	Z	690S	
C217,218			CK73FF1E104Z	CHIP C	0.1UF	Z		
C219-221			CK73FB1E103K	CHIP C	0.01UF	K		
C222			CC73FSL1H331J	CHIP C	330PF	J		
C223			CK73FF1E104Z	CHIP C	0.1UF	Z		
C224,225			CK73FB1H102K	CHIP C	1000PF	K		
C226			CE04EW1H010M	ELECTRO	1.0UF	50WV		
C227-231			CK73FB1E103K	CHIP C	0.01UF	K		

L:Scandinavia K:USA P:Canada
Y:PX(Far East, Hawaii) T:England E:Europe
Y:AAFES(Europe) X:Australia M:Other Areas

TS-450S : K,X,P,E,E2,M,M2
TS-690S : K,X,P,E,E2,M

⚠ indicates safety critical components.

PARTS LIST

× New Parts
Parts without Parts No. are not supplied.
Les articles non mentionnes dans le Parts No. ne sont pas fournis.
Teile ohne Parts No. werden nicht geliefert.

RF UNIT (X44-3130-XX)

Ref. No. 参照番号	Address 位置	New Parts 新	Parts No. 部品番号	Description 部品名／規格	Destination 仕向	Remarks 備考
C232			CK73FB1H102K	CHIP C 1000PF K		
C233,234			CK73FB1E103K	CHIP C 0.01UF K		
C235			CE04EW1H2R2M	ELECTRO 2.2UF 50WV		
C236			CK73FB1H102K	CHIP C 1000PF K		
C237-241			CK73FB1E103K	CHIP C 0.01UF K		
C242			CK73FB1E103K	CHIP C 0.01UF K	690S	
C243			CK73FF1E104Z	CHIP C 0.1UF Z		
C244			CC73FCH1H150J	CHIP C 15PF J		
C245			CK73FB1E103K	CHIP C 0.01UF K		
C246			CC73FCH1H150J	CHIP C 15PF J		
C247			CK73FB1E103K	CHIP C 0.01UF K		
C248,249			CC73FCH1H100D	CHIP C 10PF D		
C250,251			CK73FB1E103K	CHIP C 0.01UF K		
C252			CC73FCH1H050C	CHIP C 5PF C		
C253,254			CK73FB1E473K	CHIP C 0.047UF K		
C255			CK73FB1E103K	CHIP C 0.01UF K		
C256			CK73FF1E104Z	CHIP C 0.1UF Z		
C257,258			CK73FB1H102K	CHIP C 1000PF K		
C259			CK73FB1E103K	CHIP C 0.01UF K		
C260			CE04EW1C100M	ELECTRO 10UF 16WV		
C261			CK73FB1E473K	CHIP C 0.047UF K		
C262			CK73FF1E104Z	CHIP C 0.1UF Z		
C263			CC73FCH1H030C	CHIP C 3PF C		
C264			CK73FB1E473K	CHIP C 0.047UF K		
C265			CK73FB1E103K	CHIP C 0.01UF K		
C266			CC73FSL1H471J	CHIP C 47PF J		
C267			CC73FCH1H100D	CHIP C 10PF D		
C268			CK73FB1E103K	CHIP C 0.01UF K		
C269			CK73FB1H102K	CHIP C 0.001UF K		
C501-514			CC73FCH1H101J	CHIP C 100PF J		
C515			CK73FF1E104Z	CHIP C 0.1UF Z		
C516-519			CK73FB1H102K	CHIP C 1000PF K		
TC1 ,2			C05-0356-05	TRIM CAP 20PF		
A1 -4			J32-0761-04	STUD		
A9			E23-0623-04	TERMINAL (GND)		
CN1			E40-5348-05	PIN CONNECTOR (15P)		
CN2			E40-5467-05	PIN CONNECTOR (10P)		
CN3			E40-3239-05	PIN CONNECTOR (4P)		
CN4			E40-3238-05	PIN CONNECTOR (3P)		
CN5			E40-3237-05	PIN CONNECTOR (2P)		
CN6			E40-3239-05	PIN CONNECTOR (4P)		
CN7 ,8			E40-3237-05	PIN CONNECTOR (2P)		
CN9 -11			E04-0154-05	RF COAXIAL CABLE RECEPTACLE		
CN12-15			E40-5059-05	PIN CONNECTOR (5P)		
CN501			E40-5427-05	PIN CONNECTOR (20P)		
CN502			E40-3241-05	PIN CONNECTOR (6P)		
J1			E06-0858-15	CYLINDRICAL RECEPTACLE(8P)		
TP1 ,2			E40-3246-05	PH CONNECTOR (73.05MHZ)		
TP3			E23-0512-05	TERMINAL (CAL)		
W1			R92-0150-05	JAMPER R 0 OHM		
W501			E37-0253-05	FINISHED WIRE SET		
W502			E37-0254-05	FINISHED WIRE SET		
A5 -8			N30-3010-46	PAN HEAD MACHINE SCREW		

L:Scandinavia K:USA P:Canada
Y:PX(Far East, Hawaii) T:England E:Europe
Y:AAFES(Europe) X:Australia M:Other Areas

TS-450S : K,X,P,E,E2,M,M2
TS-690S : K,X,P,E,E2,M

⚠ indicates safety critical components.

PARTS LIST

× New Parts
Parts without Parts No. are not supplied.
Les articles non mentionnes dans le Parts No. ne sont pas fournis.
Teile ohne Parts No. werden nicht geliefert.

RF UNIT (X44-3130-XX)

Ref. No. 参照番号	Address 位置	New Parts 新	Parts No. 部品番号	Description 部品名／規格	Destination 仕向	Remarks 備考
CF1			L72-0351-05	CERAMIC FILTER (8.83MHZ)		
L1			L40-1011-15	SMALL FIXED INDUCTOR(100UH)		
L2			L34-1163-05	COIL (9T)		
L3			L34-1162-05	COIL (6T)		
L4			L40-1021-15	SMALL FIXED INDUCTOR(1UH)		
L5 ,6			L40-1501-15	SMALL FIXED INDUCTOR(15UH)		
L7			L40-1021-15	SMALL FIXED INDUCTOR(1UH)		
L8 ,9			L40-5691-15	SMALL FIXED INDUCTOR(5.6UH)		
L10			L40-1021-15	SMALL FIXED INDUCTOR(1UH)		
L11			L40-1592-15	SMALL FIXED INDUCTOR(1.5UH)		
L12			L40-8291-15	SMALL FIXED INDUCTOR(8.2UH)		
L13			L40-1592-15	SMALL FIXED INDUCTOR(1.5UH)		
L14			L40-1021-15	SMALL FIXED INDUCTOR(1UH)		
L15		*	L40-4791-15	SMALL FIXED INDUCTOR(4.7UH)		
L16			L40-4701-15	SMALL FIXED INDUCTOR(47UH)		
L17			L40-1292-15	SMALL FIXED INDUCTOR(1.2UH)		
L18			L40-5691-15	SMALL FIXED INDUCTOR(5.6UH)		
L19			L40-1292-15	SMALL FIXED INDUCTOR(1.2UH)		
L20			L40-1092-15	SMALL FIXED INDUCTOR(1UH)		
L21			L40-2792-15	SMALL FIXED INDUCTOR(2.7UH)		
L22			L40-1092-15	SMALL FIXED INDUCTOR(1UH)		
L23			L40-3382-15	SMALL FIXED INDUCTOR(0.33UH)		
L24			L40-2792-15	SMALL FIXED INDUCTOR(2.7UH)		
L25			L40-3382-15	SMALL FIXED INDUCTOR(0.33UH)		
L26			L40-2282-15	SMALL FIXED INDUCTOR(0.22UH)		
L27			L40-2292-15	SMALL FIXED INDUCTOR(2.2UH)		
L28 ,29			L40-2282-15	SMALL FIXED INDUCTOR(0.22UH)		
L30			L40-1092-15	SMALL FIXED INDUCTOR(1UH)		
L31			L40-2282-15	SMALL FIXED INDUCTOR(0.22UH)		
L32			L34-1163-05	COIL (9T)		
L33		*	L40-4782-15	SMALL FIXED INDUCTOR(0.47UH)		
L34			L34-1163-05	COIL (9T)		
L35			L34-4007-05	COIL		
L36			L40-1001-15	SMALL FIXED INDUCTOR(10UH)		
L37			L40-1011-15	SMALL FIXED INDUCTOR(100UH)		
L38			L34-1162-05	COIL (6T)	690S	
L39			L40-3382-15	SMALL FIXED INDUCTOR(0.33UH)	690S	
L40			L34-1162-05	COIL (6T)	690S	
L41			L34-4002-05	COIL	690S	
L42			L34-1001-05	SMALL FIXED INDUCTOR(10UH)	690S	
L43			L40-1001-15	SMALL FIXED INDUCTOR(10UH)		
L44			L40-1011-15	SMALL FIXED INDUCTOR(100UH)	690S	
L45			L40-1021-15	SMALL FIXED INDUCTOR(1UH)		
L46			L19-0324-05	BALUN TRANSFORMER		
L47			L40-3391-15	SMALL FIXED INDUCTOR(3.3UH)		
L48			L19-0324-05	BALUN TRANSFORMER		
L49			L34-1163-05	COIL (9T)		
L50			L34-1162-05	COIL (6T)		
L51			L19-0324-05	BALUN TRANSFORMER		
L52			L40-1011-15	SMALL FIXED INDUCTOR(100UH)		
L53			L34-4222-05	COIL		
L54 ,55			L34-4006-05	COIL		
L56			L39-0454-05	TOLOIDAL COIL		
L57			L40-1001-15	SMALL FIXED INDUCTOR(10UH)		
L58			L39-0432-05	TOROIDAL COIL		

L:Scandinavia K:USA P:Canada
Y:PX(Far East, Hawaii) T:England E:Europe
Y:AAFES(Europe) X:Australia M:Other Areas

TS-450S : K,X,P,E,E2,M,M2
TS-690S : K,X,P,E,E2,M

⚠ indicates safety critical components.

PARTS LIST

× New Parts
Parts without Parts No. are not supplied.
Les articles non mentionnes dans le Parts No. ne sont pas fournis.
Teile ohne Parts No. werden nicht geliefert.

RF UNIT (X44-3130-XX)

Ref. No. 参照番号	Address 位置	New Parts 新	Parts No. 部品番号	Description 部品名／規格	Destination 仕向	Remarks 備考
L59			L40-1011-15	SMALL FIXED INDUCTOR(100UH)		
L60			L40-2292-15	SMALL FIXED INDUCTOR(2.2UH)		
L61			L40-1021-15	SMALL FIXED INDUCTOR(1UH)		
L62		*	L40-1892-15	SMALL FIXED INDUCTOR(1.8UH)		
L63			L40-1092-15	SMALL FIXED INDUCTOR(1UH)		
L64			L40-1292-15	SMALL FIXED INDUCTOR(1.2UH)		
L65			L40-1011-15	SMALL FIXED INDUCTOR(100UH)		
L66 ,67			L34-4190-05	COIL		
L68			L34-4211-05	COIL		
L69 ,70			L39-0454-05	TOLOIDAL COIL		
L71			L34-4209-05	COIL		
L72 ,73			L34-0943-05	COIL		
L74 ,75			L34-0941-05	COIL		
L76			L34-0943-05	COIL		
L77			L34-0664-05	COIL		
L78			L40-1011-12	SMALL FIXED INDUCTOR(100UH)		
L79			L40-4701-15	SMALL FIXED INDUCTOR(47UH)		
L80 ,81			L40-1011-15	SMALL FIXED INDUCTOR(100UH)		
L84			L40-1021-15	SMALL FIXED INDUCTOR(1UH)		
L85		*	L40-1801-15	SMALL FIXED INDUCTOR(18UH)		
L86			L34-0535-05	COIL		
L87			L34-0536-05	COIL		
L88			L40-1021-15	SMALL FIXED INDUCTOR(1UH)		
L89			L34-4190-05	COIL		
L90			L40-1092-15	SMALL FIXED INDUCTOR(1UH)		
L91			L34-4207-05	COIL		
L92			L34-0943-05	COIL		
L93			L34-0781-05	COIL		
L94			L34-0536-05	COIL		
L97			L40-1011-15	SMALL FIXED INDUCTOR(100UH)		
X1		*	L71-0423-05	MCF 73.05MHZ		
X2			L71-0260-05	MCF 8.83MHZ		
R1			RK73FB2A473J	CHIP R 47K J 1/10W		
R2			RK73FB2A471J	CHIP R 470 J 1/10W		
R3			RK73FB2A560J	CHIP R 56 J 1/10W		
R4			RK73FB2A101J	CHIP R 100 J 1/10W		
R5			RK73FB2A680J	CHIP R 68 J 1/10W		
R6 ,7			RK73FB2A390J	CHIP R 39 J 1/10W		
R8			RK73FB2A100J	CHIP R 10 J 1/10W		
R9			RK73EB2B330J	CHIP R 33 J 1/8W		
R10			RK73FB2A680J	CHIP R 68 J 1/10W		
R11			RK73EB2B330J	CHIP R 33 J 1/8W		
R12			RK73FB2A680J	CHIP R 68 J 1/10W		
R13			RK73EB2B330J	CHIP R 33 J 1/8W		
R14			RK73FB2A680J	CHIP R 68 J 1/10W		
R15			RK73EB2B330J	CHIP R 33 J 1/8W		
R16			RK73FB2A680J	CHIP R 68 J 1/10W		
R17			RK73EB2B330J	CHIP R 33 J 1/8W		
R18			RK73FB2A680J	CHIP R 68 J 1/10W		
R19			RK73EB2B330J	CHIP R 33 J 1/8W		
R20			RK73FB2A680J	CHIP R 68 J 1/10W		
R21			RK73EB2B330J	CHIP R 33 J 1/8W		
R22			RK73FB2A680J	CHIP R 68 J 1/10W		
R23			RK73FB2A330J	CHIP R 33 J 1/10W		

L:Scandinavia K:USA P:Canada
Y:PX(Far East, Hawaii) T:England E:Europe
Y:AAFES(Europe) X:Australia M:Other Areas

TS-450S : K,X,P,E,E2,M,M2
TS-690S : K,X,P,E,E2,M

⚠ indicates safety critical components.

PARTS LIST

* New Parts
Parts without Parts No. are not supplied.
Les articles non mentionnes dans le Parts No. ne sont pas fournis.
Teile ohne Parts No. werden nicht geliefert.

RF UNIT (X44-3130-XX)

Ref. No. 参照番号	Address 位置	New Parts 新	Parts No. 部品番号	Description 部品名／規格	Destination 仕向	Remarks 備考
R24 ,25			RK73FB2A101J	CHIP R 100 J 1/10W		
R26			RK73FB2A102J	CHIP R 1.0K J 1/10W		
R27			RK73FB2A122J	CHIP R 1.2K J 1/10W		
R28			RK73FB2A100J	CHIP R 10 J 1/10W		
R29 ,30			RK73FB2A271J	CHIP R 270 J 1/10W		
R31			RK73FB2A103J	CHIP R 10K J 1/10W		
R32			RK73FB2A330J	CHIP R 33 J 1/10W	690S	
R33			RK73FB2A680J	CHIP R 68 J 1/10W	690S	
R34			RK73FB2A101J	CHIP R 100 J 1/10W	690S	
R35			RK73FB2A680J	CHIP R 68 J 1/10W		
R36			RK73FB2A102J	CHIP R 1.0K J 1/10W	690S	
R37			RK73FB2A122J	CHIP R 1.2K J 1/10W	690S	
R38 ,39			RK73FB2A271J	CHIP R 270 J 1/10W	690S	
R40			RK73FB2A121J	CHIP R 120 J 1/10W		
R41			RK73FB2A221J	CHIP R 220 J 1/10W		
R42			RK73FB2A152J	CHIP R 1.5K J 1/10W		
R43			RK73FB2A220J	CHIP R 22 J 1/10W		
R44			RK73FB2A101J	CHIP R 100 J 1/10W		
R45			RK73FB2A470J	CHIP R 47 J 1/10W		
R46			RK73FB2A391J	CHIP R 390 J 1/10W		
R47			RK73FB2A471J	CHIP R 470 J 1/10W		
R48 ,49			RK73FB2A391J	CHIP R 390 J 1/10W		
R50 -53			RK73FB2A100J	CHIP R 10 J 1/10W		
R54			RK73FB2A271J	CHIP R 270 J 1/10W		
R55			RK73FB2A332J	CHIP R 3.3K J 1/10W		
R56			RK73FB2A103J	CHIP R 10K J 1/10W	690S	
R57 -60			RK73FB2A104J	CHIP R 100K J 1/10W		
R61 -69			RK73FB2A103J	CHIP R 10K J 1/10W		
R70			RK73FB2A100J	CHIP R 10 J 1/10W	690S	
R71 ,72			RK73FB2A151J	CHIP R 150 J 1/10W		
R73			RK73FB2A473J	CHIP R 47K J 1/10W		
R74			RK73FB2A472J	CHIP R 4.7K J 1/10W		
R75			RK73FB2A473J	CHIP R 47K J 1/10W		
R76			RK73FB2A102J	CHIP R 1.0K J 1/10W		
R77 -79			RK73FB2A330J	CHIP R 33 J 1/10W		
R80			RK73FB2A222J	CHIP R 2.2K J 1/10W		
R81			RK73FB2A561J	CHIP R 560 J 1/10W		
R82			RK73FB2A101J	CHIP R 100 J 1/10W		
R83			RK73FB2A151J	CHIP R 150 J 1/10W		
R84			RK73FB2A560J	CHIP R 56 J 1/10W		
R85			RK73FB2A392J	CHIP R 3.9K J 1/10W		
R86			RK73FB2A221J	CHIP R 220 J 1/10W		
R87			RK73FB2A152J	CHIP R 1.5K J 1/10W		
R88			RK73FB2A561J	CHIP R 560 J 1/10W		
R89 ,90			RK73FB2A102J	CHIP R 1.0K J 1/10W		
R91 ,92			RK73FB2A331J	CHIP R 330 J 1/10W		
R93			RK73FB2A220J	CHIP R 22 J 1/10W		
R94 ,95			RK73FB2A330J	CHIP R 33 J 1/10W		
R96			RK73FB2A220J	CHIP R 22 J 1/10W		
R97			RK73FB2A273J	CHIP R 27K J 1/10W		
R98			RK73FB2A103J	CHIP R 10K J 1/10W		
R99			RK73FB2A223J	CHIP R 22K J 1/10W		
R100			RK73FB2A103J	CHIP R 10K J 1/10W		
R101			RK73FB2A473J	CHIP R 47K J 1/10W		
R102			RK73FB2A220J	CHIP R 22 J 1/10W		

L:Scandinavia K:USA P:Canada
Y:PX(Far East, Hawaii) T:England E:Europe
Y:AAFES(Europe) X:Australia M:Other Areas

TS-450S : K,X,P,E,E2,M,M2
TS-690S : K,X,P,E,E2,M

⚠ indicates safety critical components.

PARTS LIST

× New Parts
Parts without Parts No. are not supplied.
Les articles non mentionnes dans le Parts No. ne sont pas fournis.
Teile ohne Parts No. werden nicht geliefert.

RF UNIT (X44-3130-XX)

Ref. No. 参照番号	Address 位置	New Parts 新	Parts No. 部品番号	Description 部品名／規格	Destination 仕向	Remarks 備考
R103			RK73FB2A680J	CHIP R 68 J 1/10W		
R104			RK73FB2A561J	CHIP R 560 J 1/10W		
R105			RK73FB2A101J	CHIP R 100 J 1/10W		
R106			RK73FB2A220J	CHIP R 22 J 1/10W		
R107			RK73FB2A150J	CHIP R 15 J 1/10W		
R108			RK73FB2A680J	CHIP R 68 J 1/10W		
R109			RK73FB2A102J	CHIP R 1.0K J 1/10W		
R110			RK73FB2A471J	CHIP R 470 J 1/10W		
R111			RK73FB2A560J	CHIP R 56 J 1/10W		
R112			RK73FB2A681J	CHIP R 680 J 1/10W		
R113			RK73FB2A333J	CHIP R 33K J 1/10W		
R114			RK73FB2A104J	CHIP R 100K J 1/10W		
R115			RK73FB2A474J	CHIP R 470K J 1/10W		
R116			RK73FB2A181J	CHIP R 180 J 1/10W		
R117			RK73FB2A101J	CHIP R 100 J 1/10W		
R118			RK73FB2A330J	CHIP R 33 J 1/10W		
R119			RK73FB2A102J	CHIP R 1.0K J 1/10W		
R120			RK73FB2A330J	CHIP R 33 J 1/10W		
R121,122			RK73FB2A222J	CHIP R 2.2K J 1/10W		
R123			RK73FB2A101J	CHIP R 100 J 1/10W		
R124			RK73FB2A472J	CHIP R 4.7K J 1/10W		
R125			RK73FB2A471J	CHIP R 470 J 1/10W		
R126			RK73FB2A333J	CHIP R 33K J 1/10W		
R127,128			RK73FB2A104J	CHIP R 100K J 1/10W		
R129			RK73FB2A181J	CHIP R 180 J 1/10W		
R130			RK73FB2A103J	CHIP R 10K J 1/10W		
R131			RK73FB2A101J	CHIP R 100 J 1/10W		
R132			RK73FB2A222J	CHIP R 2.2K J 1/10W		
R133			RK73FB2A471J	CHIP R 470 J 1/10W		
R134			RK73FB2A152J	CHIP R 1.5K J 1/10W		
R135			RK73FB2A101J	CHIP R 100 J 1/10W		
R136			RK73FB2A221J	CHIP R 220 J 1/10W		
R137			RK73FB2A100J	CHIP R 10 J 1/10W		
R138-140			RK73FB2A101J	CHIP R 100 J 1/10W		
R141			RK73FB2A222J	CHIP R 2.2K J 1/10W		
R142			RK73FB2A101J	CHIP R 100 J 1/10W		
R143			RK73FB2A222J	CHIP R 2.2K J 1/10W		
R144			RK73FB2A101J	CHIP R 100 J 1/10W		
R145			RK73FB2A222J	CHIP R 2.2K J 1/10W		
R146			RK73FB2A101J	CHIP R 100 J 1/10W		
R147			RK73FB2A222J	CHIP R 2.2K J 1/10W		
R148			RK73FB2A101J	CHIP R 100 J 1/10W		
R149			RK73FB2A471J	CHIP R 470 J 1/10W		
R150			RK73FB2A104J	CHIP R 100K J 1/10W		
R151			RK73FB2A393J	CHIP R 39K J 1/10W		
R152			RK73FB2A104J	CHIP R 100K J 1/10W		
R153,154			RK73FB2A330J	CHIP R 33 J 1/10W		
R155,156			RK73FB2A471J	CHIP R 470 J 1/10W		
R157			RK73FB2A101J	CHIP R 100 J 1/10W		
R158			RK73FB2A103J	CHIP R 10K J 1/10W		
R159			RK73FB2A472J	CHIP R 4.7K J 1/10W		
R160			RK73FB2A471J	CHIP R 470 J 1/10W		
R161-166			RK73FB2A104J	CHIP R 100K J 1/10W		
R167			RK73FB2A471J	CHIP R 470 J 1/10W		
R168			R92-0670-05	CHIP R 0 OHM		

L:Scandinavia K:USA P:Canada
Y:PX(Far East, Hawaii) T:England E:Europe
Y:AAFES(Europe) X:Australia M:Other Areas

TS-450S : K,X,P,E,E2,M,M2
TS-690S : K,X,P,E,E2,M

⚠ indicates safety critical components.

PARTS LIST

× New Parts
Parts without Parts No. are not supplied.
Les articles non mentionnes dans le Parts No. ne sont pas fournis.
Teile ohne Parts No. werden nicht geliefert.

RF UNIT (X44-3130-XX)

Ref. No. 参照番号	Address 位置	New Parts 新	Parts No. 部品番号	Description 部品名／規格	Destination 仕向	Remarks 備考
R169			RK73FB2A222J	CHIP R 2.2K J 1/10W		
R170			RK73FB2A152J	CHIP R 1.5K J 1/10W		
R171			RK73FB2A473J	CHIP R 47K J 1/10W		
R172			RK73FB2A472J	CHIP R 4.7K J 1/10W		
R173			RK73FB2A101J	CHIP R 100 J 1/10W		
R174			RK73FB2A472J	CHIP R 4.7K J 1/10W		
R175			RK73FB2A221J	CHIP R 220 J 1/10W		
R176			RK73FB2A102J	CHIP R 1.0K J 1/10W		
R177			RK73FB2A222J	CHIP R 2.2K J 1/10W		
R178			RK73FB2A102J	CHIP R 1.0K J 1/10W		
R179			RK73FB2A223J	CHIP R 22K J 1/10W		
R180			RK73FB2A333J	CHIP R 33K J 1/10W		
R181			RK73FB2A683J	CHIP R 68K J 1/10W		
R182			RK73FB2A102J	CHIP R 1.0K J 1/10W		
R183			RK73FB2A471J	CHIP R 470 J 1/10W		
R184			RK73FB2A103J	CHIP R 10K J 1/10W		
R185			RK73FB2A102J	CHIP R 1.0K J 1/10W		
R186			RK73FB2A333J	CHIP R 33K J 1/10W		
R187,188			RK73FB2A474J	CHIP R 470K J 1/10W		
R189			RK73FB2A101J	CHIP R 100 J 1/10W		
R190			RK73FB2A223J	CHIP R 22K J 1/10W		
R191			RK73FB2A153J	CHIP R 15K J 1/10W		
R192-193			RK73FB2A101J	CHIP R 100 J 1/10W		
R194			RK73FB2A102J	CHIP R 1.0K J 1/10W		
R195			RK73FB2A562J	CHIP R 5.6K J 1/10W		
R196			RK73FB2A152J	CHIP R 1.5K J 1/10W		
R197			RK73FB2A333J	CHIP R 33K J 1/10W		
R198			RK73FB2A101J	CHIP R 100 J 1/10W		
R199			RK73FB2A103J	CHIP R 10K J 1/10W		
R200			RK73FB2A152J	CHIP R 1.5K J 1/10W		
R201			RK73FB2A273J	CHIP R 27K J 1/10W		
R202			RK73FB2A152J	CHIP R 1.5K J 1/10W		
R203			RK73FB2A680J	CHIP R 68 J 1/10W		
R204,205			RK73FB2A221J	CHIP R 220 J 1/10W		
R206-209			RK73FB2A330J	CHIP R 33 J 1/10W		
R210			RK73FB2A334J	CHIP R 330K J 1/10W		
R211			RK73FB2A103J	CHIP R 10K J 1/10W		
R212			RK73FB2A823J	CHIP R 82K J 1/10W		
R213			RK73FB2A102J	CHIP R 1.0K J 1/10W		
R214			RK73FB2A821J	CHIP R 820 J 1/10W		
R215,216			RK73FB2A101J	CHIP R 100 J 1/10W		
R217			RK73FB2A222J	CHIP R 2.2K J 1/10W		
R218			RK73FB2A103J	CHIP R 10K J 1/10W		
R219			RK73FB2A102J	CHIP R 1.0K J 1/10W		
R220			RK73FB2A223J	CHIP R 22K J 1/10W		
R221,222			RK73FB2A332J	CHIP R 3.3K J 1/10W		
R223			RK73FB2A223J	CHIP R 22K J 1/10W		
R224			RK73FB2A392J	CHIP R 3.9K J 1/10W		
R225			RK73FB2A470J	CHIP R 47 J 1/10W		
R226			RK73FB2A471J	CHIP R 470 J 1/10W		
R227			RK73FB2A221J	CHIP R 220 J 1/10W		
R228,229			RK73FB2A101J	CHIP R 100 J 1/10W		
R230			RK73FB2A560J	CHIP R 56 J 1/10W		
R231			RK73FB2A101J	CHIP R 100 J 1/10W		
R232			RK73FB2A152J	CHIP R 1.5K J 1/10W		

L:Scandinavia K:USA P:Canada
Y:PX(Far East, Hawaii) T:England E:Europe
Y:AAFES(Europe) X:Australia M:Other Areas

TS-450S : K,X,P,E,E2,M,M2
TS-690S : K,X,P,E,E2,M

⚠ indicates safety critical components.

PARTS LIST

× New Parts
Parts without Parts No. are not supplied.
Les articles non mentionnes dans le Parts No. ne sont pas fournis.
Teile ohne Parts No. werden nicht geliefert.

RF UNIT (X44-3130-XX)

Ref. No. 参照番号	Address 位置	New Parts 新	Parts No. 部品番号	Description 部品名／規格	Destination 仕向	Remarks 備考
R233			RK73FB2A101J	CHIP R 100 J 1/10W		
R234			R92-0670-05	CHIP R 0 OHM		
R235			RK73FB2A102J	CHIP R 1.0K J 1/10W		
R236			RK73FB2A104J	CHIP R 100K J 1/10W		
R237			RK73FB2A271J	CHIP R 270 J 1/10W		
R238			RK73FB2A104J	CHIP R 100K J 1/10W	690S	
R239			RK73FB2A393J	CHIP R 39K J 1/10W		
R240			R92-0670-05	CHIP R 0 OHM		
R241			RK73FB2A102J	CHIP R 1.0K J 1/10W		
R242			RK73FB2A123J	CHIP R 12K J 1/10W		
R243			RK73FB2A102J	CHIP R 1.0K J 1/10W		
R244			RK73FB2A121J	CHIP R 120 J 1/10W		
R245			RK73FB2A101J	CHIP R 100 J 1/10W		
R247,248			R92-0679-05	CHIP R 0 OHM		
R249			R92-0679-05	CHIP R 0 OHM	690S	
R250			R92-0679-05	CHIP R 0 OHM		
R251			RK73FB2A273J	CHIP R 27K J 1/10W		
R501			RK73FB2A561J	CHIP R 560 J 1/10W		
R502			RK73FB2A221J	CHIP R 220 J 1/10W		
VR1			R12-6421-05	TRIM POT. 4.7K		
VR2			R12-6415-05	TRIM POT. 470		
VR3			R12-6427-05	TRIM POT. 47K	690S	
VR4			R12-6427-05	TRIM POT. 47K		
VR5 ,6			R12-6415-05	TRIM POT. 470		
K1			S51-1436-05	RELAY		
S1 -20			S70-0403-05	TACT SWITCH		
S21 -30			S70-0403-05	TACT SWITCH		
S31 -35		*	S70-0411-05	TACT SWITCH		
S36			S40-2440-15	PUSH SWITCH		
S37		*	S40-2366-05	PUSH SWITCH		
S38			S40-2440-15	PUSH SWITCH		
S39		*	S40-2366-05	PUSH SWITCH		
D1			V08(G)	TRANSISTOR		
D2 ,3			RLS245	DIODE		
D4			V08(G)	TRANSISTOR		
D5			LFB01	DIODE		
D6 -15			RLS135	DIODE		
D16			RLS135	DIODE	690S	
D17 -25			RLS135	DIODE		
D26			RLS135	DIODE	690S	
D27 -30			RLS135	DIODE		
D31 ,32			RLS73	DIODE		
D33			RLZ5.1A	DIODE		
D34			RLS73	DIODE		
D35			RLS73	DIODE	690S	
D36 ,37			RLS135	DIODE		
D38			RLS73	DIODE		
D39 -52			RLS135	DIODE		
D53			HSM88AS	DIODE		
D54			RLS73	DIODE		
D55			RLS135	DIODE		
D56			RLZ5.1A	DIODE		
D57 -59			RLS135	DIODE		
D61 ,62			RLS135	DIODE		

L:Scandinavia K:USA P:Canada
Y:PX(Far East, Hawaii) T:England E:Europe
Y:AAFES(Europe) X:Australia M:Other Areas

TS-450S : K,X,P,E,E2,M,M2
TS-690S : K,X,P,E,E2,M

⚠ indicates safety critical components.

PARTS LIST

* New Parts
Parts without Parts No. are not supplied.
Les articles non mentionnes dans le Parts No. ne sont pas fournis.
Teile ohne Parts No. werden nicht geliefert.

RF UNIT (X44-3130-XX)
FINAL UNIT : HF 100W (X45-3400-XX)

Ref. No. 参照番号	Address 位置	New Parts 新	Parts No. 部品番号	Description 部品名／規格	Destination 仕向	Remarks 備考
D63 ,64			RLS135	DIODE	690S	
D501			B30-2005-05	LED		
D502			B30-2006-05	LED		
D503-511			RLS73	DIODE		
IC1			TC9174F	IC(CMOS I/O)		
IC2		*	SN74LS145NS	IC		
IC3			TC9174F	IC(CMOS I/O)		
IC4			TC4066BF	IC(BILATERAL SWITCH X4)		
IC5			AN612	IC(BALANCE MODULATOR)		
Q1			DTD114EK	DIGITAL TRANSISTOR		
Q2			DTA143EK	DIGITAL TRANSISTOR		
Q3			2SK520(K44)	FET		
Q4			2SC2714(Y)	TRANSISTOR		
Q5 ,6			DTC124EK	DIGITAL TRANSISTOR		
Q7			2SK520(K44)	FET	690S	
Q8			2SC2714(Y)	TRANSISTOR	690S	
Q9 ,10			2SK520(K44)	FET		
Q11 -13			DTA114EK	DIGITAL TRANSISTOR		
Q14 -17			2SK520(K44)	FET		
Q18			2SC2954(QK)	TRANSISTOR		
Q19 -21			3SK131(M)	FET		
Q22			DTA124EK	DIGITAL TRANSISTOR	690S	
Q23			DTC124EK	DIGITAL TRANSISTOR	690S	
Q24			2SC2954(QK)	TRANSISTOR		
Q25			3SK131(M)	FET		
Q26 ,27			2SK520(K44)	FET		
Q28 -30			3SK131(M)	FET		
Q31			2SK210(GR)	FET		
Q32 -34			2SC2714(Y)	TRANSISTOR		
Q35			2SC2712(Y)	TRANSISTOR		
Q36			2SC2714(Y)	TRANSISTOR		
Q37 ,38			2SC2712(Y)	TRANSISTOR		
Q39			DTA124EK	DIGITAL TRANSISTOR		
Q40			DTC124EK	DIGITAL TRANSISTOR		
Q41			2SC2712(Y)	TRANSISTOR		
Q42 ,43			DTC114EK	DIGITAL TRANSISTOR		
Q45 ,46			3SK131(M)	FET		
Q48			3SK131(M)	FET		
TH1		*	157-502-55007	THERMISTER 5K		
TH2 -4			157-302-53008	THERMISTER 3K		
TH5			157-103-55001	THERMISTOR 10K		
Z1			X59-3350-00	MODULE UNIT(NB)		
FINAL UNIT : HF 100W (X45-3400-XX) -00 : TS-690S -01 : TS-450S						
C1			CK45B1H561K	CERAMIC 560PF K		
C2			CK45F1H103Z	CERAMIC 0.010UF Z		
C3 ,4			CK45F1H223Z	CERAMIC 0.022UF Z		
C5			CK45B1H102K	CERAMIC 1000PF K		
C6 -8			CK45F1H223Z	CERAMIC 0.022UF Z		
C9			CM93D2H681J	MICA 680PF J		
C10 ,11			C91-1004-05	CHIP C 0.0068UF J		
C12			CC45SL2H151J	CERAMIC 150PF J		
C13			CM73F2H122J	CHIP C 1200PF J		
C14			CK45F1H223Z	CERAMIC 0.022UF Z		

L:Scandinavia K:USA P:Canada
Y:PX(Far East, Hawaii) T:England E:Europe
Y:AAFES(Europe) X:Australia M:Other Areas

TS-450S : K,X,P,E,E2,M,M2
TS-690S : K,X,P,E,E2,M

⚠ indicates safety critical components.

PARTS LIST

× New Parts
Parts without Parts No. are not supplied.
Les articles non mentionnes dans le Parts No. ne sont pas fournis.
Teile ohne Parts No. werden nicht geliefert.

FINAL UNIT : HF 100W (X45-3400-XX)

Ref. No. 参照番号	Address 位置	New Parts 新	Parts No. 部品番号	Description 部品名／規格	Destination 仕向	Remarks 備考
C15			C91-0119-05	CERAMIC 0.047UF K		
C16			CE04EW1C100M	ELECTRO 10UF 16WV		
C17			CK45F1H223Z	CERAMIC 0.022UF Z		
C18			CE04EW1E101M	ELECTRO 100UF 25WV		
C19			CK45F1H223Z	CERAMIC 0.022UF Z		
C20			CK45B1H102K	CERAMIC 1000PF K		
C21			C91-0119-05	CERAMIC 0.047UF K		
C22			CE04EW1C100M	ELECTRO 10UF 16WV		
C23			CK45F1H473Z	CERAMIC 0.047UF Z		
C24			CE04EW1E101M	ELECTRO 100UF 25WV		
C25			CK45F1H473Z	CERAMIC 0.047UF Z		
C26			CK45F1H103Z	CERAMIC 0.010UF Z		
C27			CK45F1H103Z	CERAMIC 0.010UF Z	690S	
C28			CE04EW1E470M	ELECTRO 47UF 25WV		
C29 ,30			CK45F1H103Z	CERAMIC 0.010UF Z		
C31			C90-0817-05	ELECTRO 1000UF 16WV		
C32			CK45F1H473Z	CERAMIC 0.047UF Z		
C33			C90-0817-05	ELECTRO 1000UF 16WV		
C34			CK45F1H473Z	CERAMIC 0.047UF Z		
C35			CE04EW1E470M	ELECTRO 47UF 25WV		
C36			CK45F1H223Z	CERAMIC 0.022UF Z		
C37			C91-0119-05	CERAMIC 0.047UF K		
C38			CE04EW1A470M	ELECTRO 47UF 10WV		
C39			CE04EW1E470M	ELECTRO 47UF 25WV		
C40			CK45F1H223Z	CERAMIC 0.022UF Z		
C41			C91-0119-05	CERAMIC 0.047UF K		
C42			CE04EW1A470M	ELECTRO 47UF 10WV		
C43			CC45SL2H121J	CERAMIC 120PF J		
C45			CK45F1H103Z	CERAMIC 0.010UF Z	690S	
C47			CE04EW1A101M	ELECTRO 100UF 10WV		
C48			CE04EW1E470M	ELECTRO 47UF 25WV		
C49			CK45F1H223Z	CERAMIC 0.022UF Z		
C50			C91-0119-05	CERAMIC 0.047UF K		
C51			CE04EW1A470M	ELECTRO 47UF 10WV		
C52 ,53			C91-1075-05	CERAMIC 470PF K		
C63			CK45B1H471K	CERAMIC 470PF K		
CN1			E04-0154-05	RF COAXIAL CABLE RECEPTACLE		
CN2			E40-3243-05	PIN CONNECTOR (8P)		
CN3			E40-3238-05	PIN CONNECTOR (3P)		
CN4			E40-3240-05	PIN CONNECTOR (5P)		
CN6			E40-3239-05	PIN CONNECTOR (4P)	690S	
CN7			E04-0154-05	RF COAXIAL CABLE RECEPTACLE	690S	
CN8 ,9			E40-3246-05	PH CONNECTOR (2P)		
K1			S76-0408-05	RELAY	690S	
TP1 -3			E23-0512-05	TERMINAL (FOR D1)		
285	3J		F01-0986-01	HEAT SINK		
286	2K	*	F20-1072-04	INSULATING BOARD		
288	2J		F29-0014-05	INSULATOR		
290	2K		G02-0574-04	FLAT SPRING		
-			J61-0307-05	WIRE BAND		
L1			L40-1501-14	SMALL FIXED INDUCTOR(15UH)		
L2			L40-3391-14	SMALL FIXED INDUCTOR(3.3UH)		

L:Scandinavia K:USA P:Canada
Y:PX(Far East, Hawaii) T:England E:Europe
Y:AAFES(Europe) X:Australia M:Other Areas

TS-450S : K,X,P,E,E2,M,M2
TS-690S : K,X,P,E,E2,M

⚠ indicates safety critical components.

PARTS LIST

× New Parts
Parts without Parts No. are not supplied.
Les articles non mentionnes dans le Parts No. ne sont pas fournis.
Teile ohne Parts No. werden nicht geliefert.

FINAL UNIT : HF 100W (X45-3400-XX)

Ref. No. 参照番号	Address 位置	New Parts 新	Parts No. 部品番号	Description 部品名／規格	Destination 仕向	Remarks 備考
L3			L19-0315-25	BALUN TRANSFORMER		
L4 ,5			L33-0699-05	CHOKE COIL		
L6 ,7			L33-0232-05	CHOKE COIL 1UH		
L8			L33-0699-05	CHOKE COIL		
L9			L19-0342-05	BALUN TRANSFORMER		
L10 ,11			L33-0617-05	RFC		
L12			L39-0482-05	TOROIDAL COIL (NFB)		
L13		*	L39-1209-05	TOROIDAL COIL (FINAL/100W 4T)		
L14			L33-0651-05	CHOKE COIL		
L15			L33-0617-05	RFC		
L16			L40-1011-13	SMALL FIXED INDUCTOR(100UH)		
L17			L15-0016-05	LOW-FREQUENCY CHOKE COIL		
L18			L40-4701-13	SMALL FIXED INDUCTOR(47UH)		
-			N09-2077-05	SCREW		
X	2J		N30-3008-46	PAN HEAD MACHINE SCREW		
N	2J		N87-3006-46	BRAZIER HEAD TAPTITE SCREW		
R1			RD14BB2C560J	RD 56 J 1/6W		
R2 ,3			RD14BB2C331J	RD 330 J 1/6W		
R4			RD14BB2C681J	RD 680 J 1/6W		
R5			RC05GF2H5R6J	RC 5.6 J 1/2W		
R6 ,7			RD14CB2E150J	RD 15 J 1/4W		
R8 ,9			RS14DB3A181J	FL-PROOF RS 180 J 1W		
R10 -13			RS14DB3A5R6J	FL-PROOF RS 5.6 J 1W		
R14 ,15			RS14DB3A150J	FL-PROOF RS 15 J 1W		
R16 ,17			RS14DB3A3R3J	FL-PROOF RS 3.3 J 1W		
R18			RS14DB3A100J	FL-PROOF RS 10 J 1W		
R19			RD14BB2C561J	RD 560 J 1/6W		
R20			RD14BB2C101J	RD 100 J 1/6W		
R21			RS14DB3A180J	FL-PROOF RS 18 J 1W		
R22			RD14BB2C101J	RD 100 J 1/6W		
R23			RD14BB2C151J	RD 150 J 1/6W		
R24			RD14BB2C681J	RD 680 J 1/6W		
R25			RD14BB2C473J	RD 47K J 1/6W		
R26			RD14BB2C332J	RD 3.3K J 1/6W		
R27			RD14BB2C472J	RD 4.7K J 1/6W		
R31			RS14DB3A180J	FL-PROOF RS 18 J 1W		
VR1 ,2		*	R12-6734-05	TRIMMING POT. 1K		
D1			KB-365	DIODE		
D2 ,3			SV03YS	DIODE		
D4			1S1555	DIODE	690S	
D5			1S1555	DIODE		
D6			SG-5L(R)	DIODE		
D7 ,8			1SS133	DIODE	690S	
IC1			UPC7808H	IC(VOLTAGE REGULATOR/ +8V)		
IC2			UPC7805H	IC(VOLTAGE REGULATOR/ +5V)		
IC3			UPC7808H	IC(VOLTAGE REGULATOR/ +8V)		
Q1			2SC1971	TRANSISTOR		
Q2 ,3			2SC2509	TRANSISTOR		
Q4 ,5			2SC2879	TRANSISTOR		
Q6 ,7			2SD1406(Y)	TRANSISTOR		
Q8			2SC1959(Y)	TRANSISTOR		
TH1			5TP41L	DIODE		
-			X59-3370-00	MODULE UNIT(FAN)		

L:Scandinavia K:USA P:Canada
Y:PX(Far East, Hawaii) T:England E:Europe
Y:AAFES(Europe) X:Australia M:Other Areas

TS-450S : K,X,P,E,E2,M,M2
TS-690S : K,X,P,E,E2,M

⚠ indicates safety critical components.

PARTS LIST

× New Parts
Parts without Parts.No. are not supplied.
Les articles non mentionnes dans le Parts No. ne sont pas fournis.
Teile ohne Parts No. werden nicht geliefert.

FINAL UNIT : HF 100W (X45-3400-XX)
FINAL UNIT : 50M 10W (X45-3420-00)
FINAL UNIT : 50M 50W (X45-3430-00)

Ref. No. 参照番号	Address 位置	New Parts 新	Parts No. 部品番号	Description 部品名／規格	Destination 仕向	Remarks 備考
W1			E37-0114-05	FINISHED WIRE SET(DRV)		
W2		*	E37-0190-05	FINISHED WIRE SET(100W DC)		
W3		*	E33-1945-15	FINISHED WIRE SET(HF)		
W4		*	E33-1946-05	FINISHED WIRE SET(50MHZ)	690S	
W5		*	E33-1945-15	FINISHED WIRE SET(HF)		
W6		*	E33-1946-05	FINISHED WIRE SET(50MHZ)	690S	
W10 ,11			R92-1061-05	JUMPER REST 0 OHM	450S	
W12			R92-1061-05	JUMPER REST 0 OHM		
FINAL UNIT : 50M 10W (X45-3420-00)						
C1			CK73FB1E103K	CHIP C 0.01UF K		
C2			CC73FSL1H121J	CHIP C 120PF J		
C3 ,4			CK73FB1E103K	CHIP C 0.01UF K		
C5			CK73FB1H472K	CHIP C 4700PF K		
C6			CE04EW1E470M	ELECTRO 47UF 25WV		
C7			CK73FB1E103K	CHIP C 0.01UF K		
C8			CK73FB1H472K	CHIP C 4700PF K		
C9			CE04EW1C330M	ELECTRO 33UF 16WV		
C10			CK73FB1H472K	CHIP C 4700PF K		
C11			CE04EW1E470M	ELECTRO 47UF 25WV		
C12 ,13			CC45SL2H560J	CERAMIC 56PF J		
C14			CK73FB1E103K	CHIP C 0.01UF K		
C15			CC73FCH1H120J	CHIP C 12PF J		
C16			CC45CH1H120J	CERAMIC 12PF J		
TC1			C05-0030-15	TRIMMING CAP 20PF		
CN1 ,2			E04-0159-05	RF COAXIAL CABLE RECEPTACLE		
CN3			E40-3239-05	PIN CONNECTOR		
L1			L34-1022-05	COIL		
L2			L33-0222-05	CHOKE COIL		
L3			L40-1011-14	SMALL FIXED INDUCTOR		
L4			L33-0651-05	CHOKE COIL		
L5			L34-1027-05	COIL		
R1			RK73FB2A332J	CHIP R 3.3K J 1/10W		
R2			RK73FB2A561J	CHIP R 560 J 1/10W		
R3			RK73EB2B100J	CHIP R 10 J 1/8W		
R4			RK73FB2A471J	CHIP R 470 J 1/10W		
IC1			M57735	IC(POWER MODULE)		
Q1			2SC2954(QK)	TRANSISTOR		
FINAL UNIT : 50M 50W (X45-3430-00)						
C1			CC45SL2H330J	CERAMIC 33PF J		
C2			CM93D2H391J	MICA 390PF J		
C3 ,4		*	CK45B1H272K	CERAMIC 2700PF K		
C5			CM93D2H331J	MICA 330PF J		
C6			CK45B1H102K	CERAMIC 1000PF K		
C7			C91-0119-05	CERAMIC 0.047UF K		
C8			CE04EW1C100M	ELECTRO 10UF 16WV		
C9			CE04EW1E101M	ELECTRO 100UF 25WV		
C10 ,11			CK45F1H473Z	CERAMIC 0.047UF Z		
C12 ,13			CK45B1H102K	CERAMIC 1000PF K		
C14			CE04EW1E100M	ELECTRO 10UF 25WV		
C15			CE04EW1C101M	ELECTRO 100UF 16WV		
-			E31-6118-05	CONNECTING WIRE		
-		*	E37-0201-05	CONNECTING WIRE		
CN1			E04-0157-05	RF COAXIAL CABLE RECEPTACLE		

L:Scandinavia K:USA P:Canada
Y:PX(Far East, Hawaii) T:England E:Europe
Y:AAFES(Europe) X:Australia M:Other Areas

TS-450S : K,X,P,E,E2,M,M2
TS-690S : K,X,P,E,E2,M

⚠ indicates safety critical components.

PARTS LIST

× New Parts
Parts without Parts No. are not supplied.
Les articles non mentionnes dans le Parts No. ne sont pas fournis.
Teile ohne Parts No. werden nicht geliefert.

FINAL UNIT : 50M 50W (X45-3430-00)
DIGITAL UNIT (X46-312X-XX)

Ref. No. 参照番号	Address 位置	New Parts 新	Parts No. 部品番号	Description 部品名／規格	Destination 仕向	Remarks 備考
CN2			E40-3239-05	PIN CONNECTOR		
CN3			E40-3246-05	PIN CONNECTOR		
TP1			E23-0512-05	TERMINAL		
W1		*	E33-1947-05	FINISHED WIRE SET		
W2		*	E33-1947-05	FINISHED WIRE SET		
301	1N		F01-0987-12	HEAT SINK		
303	1M	*	F09-0429-05	HEAD PROTECTOR		
305	2M	*	F10-1497-03	SHIELDING PLATE		
306	1N		G02-0576-14	LEAF SPRING		
L1		*	L39-1211-05	COIL		
L2 ,3			L33-0699-05	CHOKE COIL		
L4		*	L39-1212-05	COIL		
L5 ,6			L33-0651-05	CHOKE COIL		
L7			L40-1011-13	SMALL FIXED INDUCTOR		
L8			L40-1011-14	SMALL FIXED INDUCTOR		
X	2M		N30-3008-46	PAN HEAD MACHINE SCREW		
K	1N		N35-3018-46	BINDING HEAD MACHINE SCREW		
N	1N		N87-3006-46	BRAZIER HEAD TAPTITE SCREW		
I	1N		N33-3006-41	OVAL HEAD MACHINE SCREW		
R1 ,2			RS14DB3A150J	FL-PROOF RS 15 J 1W		
R3			RD14BB2C561J	RD 560 J 1/6W		
R4			RD14BB2C101J	RD 100 J 1/6W		
R5			RS14DB3A220J	FL-PROOF RS 22 J 1W		
R6			RD14BB2C332J	RD 3.3K J 1/6W		
R7			RD14BB2C472J	RD 4.7K J 1/6W		
R8			RS14DB3A220J	FL-PROOF RS 22 J 1W		
VR1			R12-1083-05	TRIM POT. 1K		
W3			R92-1061-05	JUMPER REST 0 OHM		
D1			SV03YS	DIODE		
D2			1S1555	DIODE		
Q1 ,2			2SC2879	TRANSISTOR		
Q3			2SD1406(Y)	TRANSISTOR		
Q4			2SC1959(Y)	TRANSISTOR		
TH1			5TP41L	DIODE		
-			X59-3370-00	MODULE UNIT(FAN)		
DIGITAL UNIT (X46-312X-XX)	0-11 : TS-690S (K,P) 0-12 : TS-450S (K,P) 0-21 : TS-690S (X,M) 0-22 : TS-450S (X,M) 0-23 : TS-450S (M2) 2-71 : TS-690S (E) 2-72 : TS-450S (E) 2-73 : TS-690S (E2) 2-74 : TS-450S (E2)					
C1			CE04EW1A101M	ELECTRO 100UF 10WV		
C2			CE04EW1A470M	ELECTRO 47UF 10WV		
C3			CE04EW1E470M	ELECTRO 47UF 25WV		
C4			CE04EW1A101M	ELECTRO 100UF 10WV		
C5			CE04EW1A470M	ELECTRO 47UF 10WV		
C6			CE04EW1A101M	ELECTRO 100UF 10WV		
C7			C90-2041-05	ERECTRO 10UF 10WV		
C8			CE04EW1A101M	ELECTRO 100UF 10WV		
C9 -12			CE04EW1A470M	ELECTRO 47UF 10WV		
C13			CE04EW1H3R3M	ELECTRO 3.3UF 50WV		
C16 -33			CK73FB1E103K	CHIP C 0.01UF K		
C36 ,37			CC73FCH1H100D	CHIP C 10PF D		
C38 -51			CK73FB1E103K	CHIP C 0.01UF K		
C52 -56			CK73FB1H102K	CHIP C 1000PF K		
C58 -66			CK73FB1H102K	CHIP C 1000PF K		

L:Scandinavia K:USA P:Canada
Y:PX(Far East, Hawaii) T:England E:Europe
Y:AAFES(Europe) X:Australia M:Other Areas

TS-450S : K,X,P,E,E2,M,M2
TS-690S : K,X,P,E,E2,M

⚠ indicates safety critical components.

PARTS LIST

* New Parts
Parts without Parts No. are not supplied.
Les articles non mentionnes dans le Parts No. ne sont pas fournis.
Teile ohne Parts No. werden nicht gellefert.

DIGITAL UNIT (X46-312X-XX)

Ref. No. 参照番号	Address 位置	New Parts 新	Parts No. 部品番号	Description 部品名／規格	Destination 仕向	Remarks 備考
C67 -79			CK73FB1E103K	CHIP C 0.01UF K		
C80 -83			CK73FB1H102K	CHIP C 1000PF K		
C84 -88			CK73FB1E103K	CHIP C 0.01UF K		
C89 -96			CK73FB1H102K	CHIP C 1000PF K		
C97			CK73FB1E103K	CHIP C 0.01UF K		
C98 ,99			CK73FB1H102K	CHIP C 1000PF K		
C100-103			CK73FB1E103K	CHIP C 0.01UF K		
C104-107			CK73FB1H102K	CHIP C 1000PF K		
C108			CK73FB1E103K	CHIP C 0.01UF K		
C109-111			CK73FB1H102K	CHIP C 1000PF K		
C112,113			CK73FB1E103K	CHIP C 0.01UF K		
C114-120			CK73FB1H102K	CHIP C 1000PF K		
C121-122			CK73FB1E103K	CHIP C 0.01UF K		
C123-136			CK73FB1H471K	CHIP C 470PF K		
C137,138			CK73FB1E103K	CHIP C 0.01UF K		
C139-142			CK73FB1H102K	CHIP C 1000PF K		
C143-155			CK73FB1E103K	CHIP C 0.01UF K		
CN1			E40-5467-05	PIN CONNECTOR (10P)		
CN2			E40-3240-05	PIN CONNECTOR (5P)		
CN3			E40-3237-05	PIN CONNECTOR (2P)		
CN4			E40-5427-05	PIN CONNECTOR (20P)		
CN5			E40-5154-05	PIN CONNECTOR (12P)		
CN6			E40-5477-05	PIN CONNECTOR (8P)		
CN7 ,8			E40-3239-05	PIN CONNECTOR (4P)		
CN9		*	E40-5381-05	PIN CONNECTOR (16P)		
CN10			E40-3241-05	PIN CONNECTOR (6P)		
CN11		*	E40-5523-05	PIN CONNECTOR (10P)		
CN12			E40-3238-05	PIN CONNECTOR (3P)		
CN13		*	E40-5426-05	PIN CONNECTOR (20P)		
CN14			E40-3237-05	PIN CONNECTOR (2P)		
CN15			E02-2015-05	IC SOCKET		
J1			E56-0403-05	CYLINDRICAL RECEPTACLE(ACC1)		
L1			L40-4711-12	SMALL FIXED INDUCTOR(470UH)		
L2			L40-1011-14	SMALL FIXED INDUCTOR(100UH)		
L3			L40-4711-13	SMALL FIXED INDUCTOR(470UH)		
L4		*	L40-2201-12	SMALL FIXED INDUCTOR(22UH)		
L5			L40-2211-14	SMALL FIXED INDUCTOR(20UH)		
L6 ,7			L40-1011-14	SMALL FIXED INDUCTOR(100UH)		
L8			L40-1011-12	SMALL FIXED INDUCTOR(100UH)		
L9 ,10			L40-1011-14	SMALL FIXED INDUCTOR(100UH)		
L11 ,12			L40-4701-17	SMALL FIXED INDUCTOR(47UH)		
L13 ,14			L40-1011-17	SMALL FIXED INDUCTOR(100UH)		
X1			L77-1380-05	CRYSTAL RESONATOR (11.0592MHZ)		
CP1			R90-0455-05	MULTI-COMP 4.7KX8 J 1/4W		
R1			RK73FB2A273J	CHIP R 27K J 1/10W		
R2			RK73FB2A220J	CHIP R 22 J 1/10W		
R3 ,4			RK73FB2A103J	CHIP R 10K J 1/10W		
R5 -12			RK73FB2A104J	CHIP R 100K J 1/10W		
R13 ,14			RK73FB2A101J	CHIP R 100 J 1/10W		
R15 -18			RK73FB2A472J	CHIP R 4.7K J 1/10W		
R19 -23			RK73FB2A221J	CHIP R 220 J 1/10W		
R25			RK73FB2A221J	CHIP R 220 J 1/10W		
R26 -31			RK73FB2A101J	CHIP R 100 J 1/10W		

L:Scandinavia K:USA P:Canada
Y:PX(Far East, Hawaii) T:England E:Europe
Y:AAFES(Europe) X:Australia M:Other Areas

TS-450S : K,X,P,E,E2,M,M2
TS-690S : K,X,P,E,E2,M

⚠ indicates safety critical components.

PARTS LIST

* New Parts
Parts without Parts No. are not supplied.
Les articles non mentionnes dans le Parts No. ne sont pas fournis.
Teile ohne Parts No. werden nicht gellefert.

DIGITAL UNIT (X46-312X-XX)

Ref. No. 参照番号	Address 位置	New Parts 新	Parts No. 部品番号	Description 部品名／規格	Destination 仕向	Remarks 備考
R32 -39			RK73FB2A221J	CHIP R 220 J 1/10W		
R40 -42			RK73FB2A102J	CHIP R 1.0K J 1/10W		
R43 -46			RK73FB2A103J	CHIP R 10K J 1/10W		
R47 -50			RK73FB2A102J	CHIP R 1.0K J 1/10W		
R51 -54			RK73FB2A221J	CHIP R 220 J 1/10W		
R55 ,56			RK73FB2A102J	CHIP R 1.0K J 1/10W		
R57 ,58			RK73FB2A470J	CHIP R 47 J 1/10W		
R59 ,60			RK73FB2A472J	CHIP R 4.7K J 1/10W		
R61			RK73FB2A103J	CHIP R 10K J 1/10W		
R62			RK73FB2A223J	CHIP R 22K J 1/10W		
R63 -68			RK73FB2A221J	CHIP R 220 J 1/10W		
R69 ,70			RK73FB2A103J	CHIP R 10K J 1/10W		
R71 -74			RK73FB2A221J	CHIP R 220 J 1/10W		
R75			RK73FB2A102J	CHIP R 1.0K J 1/10W		
R76 -82			RK73FB2A221J	CHIP R 220 J 1/10W		
R83 ,84			RK73FB2A101J	CHIP R 100 J 1/10W		
R85 ,86			RK73FB2A472J	CHIP R 4.7K J 1/10W		
R87 -100			RK73FB2A101J	CHIP R 100 J 1/10W		
R101-108			RK73FB2A103J	CHIP R 10K J 1/10W		
R109			RK73FB2A101J	CHIP R 100 J 1/10W		
R110			RK73FB2A103J	CHIP R 10K J 1/10W		
R111			RK73FB2A471J	CHIP R 470 J 1/10W		
R112			RK73FB2A103J	CHIP R 10K J 1/10W		
R113-116			RK73FB2A221J	CHIP R 220 J 1/10W		
R117,118			RK73FB2A472J	CHIP R 4.7K J 1/10W		
R121,122			RK73FB2A101J	CHIP R 100 J 1/10W		
R123-126			RK73FB2A102J	CHIP R 1.0K J 1/10W		
R127			RK73FB2A103J	CHIP R 10K J 1/10W		
R130-146			RK73FB2A103J	CHIP R 10K J 1/10W		
D1 -5			RLS73	DIODE		
D6 -13			02CZ5.1	DIODE		
D20			1SS133	DIODE	E	
D21			1SS133	DIODE	KPEE2	
D22			1SS133	DIODE	MM2X	
D23			1SS133	DIODE	EE2	
D26			RLS73	DIODE	450KPX	
D26			RLS73	DIODE	450EE2	
D27			RLS73	DIODE	KP	
IC1		*	UPD78213GJ-5BJ	IC(CPU)		
IC2		*	C256B-15XF1JBU1	IC(ROM)		
IC2		*	27C256A-20JBU1	IC(ROM)		
IC3		*	LC3564PML-12	IC(RAM)		
IC4			TC74HC573AF	IC(LATCH)		
IC5			TC74HC138AF	IC(DECODER)		
IC6 ,7			CXD1095Q	IC(I/O EXPANDER)		
IC8		*	LZ92K371	IC		
IC9			CAT35C104KI	IC(4K EEPROM)		
IC10			M51951BML	IC(SYSTEM RESET)		
IC11			TC7S08F	IC(2CH NAND GATE)		
IC12		*	SN74AS04NS	IC		
IC13-16			TC4S584F	IC(SCHMITT TRIGGER)		
Q1			DTC124EK	DIGITAL TRANSISTOR		
Q2 ,3			DTC143EK	DIGITAL TRANSISTOR		
Q4 ,5			DTA143EK	DIGITAL TRANSISTOR		

L:Scandinavia K:USA P:Canada
Y:PX(Far East, Hawaii) T:England E:Europe
Y:AAFES(Europe) X:Australia M:Other Areas

TS-450S : K,X,P,E,E2,M,M2
TS-690S : K,X,P,E,E2,M

⚠ indicates safety critical components.

PARTS LIST

× New Parts
Parts without Parts No. are not supplied.
Les articles non mentionnes dans le Parts No. ne sont pas fournis.
Teile ohne Parts No. werden nicht geliefert.

DIGITAL UNIT (X46-312X-XX)
IF UNIT (X48-3090-XX)

Ref. No. 参照番号	Address 位置	New Parts 新	Parts No. 部品番号	Description 部品名／規格	Destination 仕向	Remarks 備考
Q6			FMC3	TRANSISTOR		
BA1			W09-0514-05	LITHIUM BATTERY(CR2430)		
IF UNIT (X48-3090-XX) -00 : TS-690S -01 : TS-450S						
Z1		*	X59-3030-03	MODULE UNIT(NOTCH)		
Z2		*	X59-3920-00	MODULE UNIT(SEL)		
Z3			X59-3680-01	MODULE UNIT(TRX)		
Z4		*	X59-3930-00	MODULE UNIT(BK-IN)		
Z5			X59-3860-00	MODULE UNIT(DELAY)		
Z6			X59-1060-00	MODULE UNIT(SIDE TONE)		
Z7			X59-3000-03	MODULE UNIT(FM MIC)		
Z8			X59-1080-00	MODULE UNIT(VOX)		
Z9		*	X59-3940-00	MODULE UNIT(METER)		
C1 ,2			CK73FF1E104Z	CHIP C 0.1UF Z		
C3			CK73FB1E473K	CHIP C 0.047UF K		
C4 ,5			CK73FF1E104Z	CHIP C 0.1UF Z		
C6			CK73FB1E473K	CHIP C 0.047UF K		
C7 -19			CK73FF1E104Z	CHIP C 0.1UF Z		
C20			CK73FB1E103K	CHIP C 0.01UF K		
C21 -27			CK73FF1E104Z	CHIP C 0.1UF Z		
C28			CC73FCH1H050C	CHIP C 5PF C		
C29 ,30			CK73FF1E104Z	CHIP C 0.1UF Z		
C31			CK73FB1H102K	CHIP C 1000PF K		
C32			CK73FF1E104Z	CHIP C 0.1UF Z		
C33			CK73FB1H102K	CHIP C 1000PF K		
C34			CK73FF1E104Z	CHIP C 0.1UF Z		
C35			CE04EW1C100M	ELECTRO 10UF 16WV		
C36			CK73FF1E104Z	CHIP C 0.1UF Z		
C37			CC73FCH1H101J	CHIP C 100PF J		
C38			CK73FF1E104Z	CHIP C 0.1UF Z		
C39			CK73FB1E103K	CHIP C 0.01UF K		
C40			CK73FF1E104Z	CHIP C 0.1UF Z		
C41			CK73FB1E103K	CHIP C 0.01UF K		
C42			CK73FB1E473K	CHIP C 0.047UF K		
C43			CK73FF1E104Z	CHIP C 0.1UF Z		
C44			CE04EW1A471M	ELECTRO 470UF 10WV		
C45			CC73FCH1H101J	CHIP C 100PF J		
C46 -48			CK73FB1E103K	CHIP C 0.01UF K		
C49			CC73FSL1H221J	CHIP C 220PF J		
C50			CK73FB1E103K	CHIP C 0.01UF K		
C51			CE04EW1A101M	ELECTRO 100UF 10WV		
C52			CK73FF1C105Z	CHIP C 1.0UF Z		
C53 ,54			CE04EW1A101M	ELECTRO 100UF 10WV		
C55			CK73FB1E473K	CHIP C 0.047UF K		
C56 -59			CK73FB1H102K	CHIP C 1000PF K		
C60			CK73FB1E103K	CHIP C 0.01UF K		
C61			CK73FF1E104Z	CHIP C 0.1UF Z		
C62			CK73FB1E223K	CHIP C 0.022UF K		
C63			CC73FCH1H470J	CHIP C 47PF J		
C64			CE04EW1H010M	ELECTRO 1.0UF 50WV		
C65			CE04EW1H2R2M	ELECTRO 2.2UF 50WV		
C66			CK73FB1H102K	CHIP C 1000PF K		
C67 ,68			CC73FCH1H680J	CHIP C 68PF J		
C69 ,70			CK73FF1E104Z	CHIP C 0.1UF Z		

L:Scandinavia K:USA P:Canada
Y:PX(Far East, Hawaii) T:England E:Europe
Y:AAFES(Europe) X:Australia M:Other Areas

TS-450S : K,X,P,E,E2,M,M2
TS-690S : K,X,P,E,E2,M

⚠ indicates safety critical components.

PARTS LIST

× New Parts
Parts without Parts No. are not supplied.
Les articles non mentionnes dans le Parts No. ne sont pas fournis.
Teile ohne Parts No. werden nicht geliefert.

IF UNIT (X48-3090-XX)

Ref. No. 参照番号	Address 位置	New Parts 新	Parts No. 部品番号	Description 部品名／規格			Destination 仕向	Remarks 備考
C71			C90-2046-05	ELECTRO	22UF	10WV		
C72			CK73FF1E104Z	CHIP C	0.1UF	Z		
C73			CK73FB1H222K	CHIP C	2200PF	K		
C74			CK73FB1H102K	CHIP C	1000PF	K		
C75			CC73FSL1H121J	CHIP C	120PF	J		
C76			CK73FF1E104Z	CHIP C	0.1UF	Z		
C77			CK73FB1H102K	CHIP C	1000PF	K		
C78			CK73FB1H472K	CHIP C	4700PF	K		
C79			CK73FB1H102K	CHIP C	1000PF	K		
C80			CE04EW1A101M	ELECTRO	100UF	10WV		
C81			CK73FF1E104Z	CHIP C	0.1UF	Z		
C82			CC73FCH1H470J	CHIP C	47PF	J		
C83			CC73FSL1H221J	CHIP C	220PF	J		
C84 ,85			CE04EW1HR47M	ELECTRO	0.47UF	50WV		
C86			CK73FF1E104Z	CHIP C	0.1UF	Z		
C87			CE04EW1A101M	ELECTRO	100UF	10WV		
C88			CC73FSL1H391J	CHIP C	390PF	J		
C89			CC73FSL1H821J	CHIP C	820PF	J		
C90			CC73FSL1H391J	CHIP C	390PF	J		
C91 ,92			CK73FF1E104Z	CHIP C	0.1UF	Z		
C93			CK73FB1E104K	CHIP C	0.10UF	K		
C94			CE04EW1C100M	ELECTRO	10UF	16WV		
C95			CK73FB1E104K	CHIP C	0.10UF	K		
C96			CE04EW1A101M	ELECTRO	100UF	10WV		
C97			CK73FB1H472K	CHIP C	4700PF	K		
C98			CE04EW1C100M	ELECTRO	10UF	16WV		
C99			CE04EW1E331M	ELECTRO	330UF	25WV		
C100			CK73FB1E103K	CHIP C	0.01UF	K		
C101			CE04LW0J471M	ELECTRO	470UF	6.3WV		
C102			CK73FF1E104Z	CHIP C	0.1UF	Z		
C103			CK73FB1E103K	CHIP C	0.01UF	K		
C104			C90-2153-05	ELECTRO	470UF	10WV		
C105			CK73FB1H102K	CHIP C	1000PF	K		
C106			CE04EW1A101M	ELECTRO	100UF	10WV		
C107			CK73FF1E104Z	CHIP C	0.1UF	Z		
C108			CC73FCH1H180J	CHIP C	18PF	J		
C109			CK73FB1E103K	CHIP C	0.01UF	K		
C110,111			CK73FF1E104Z	CHIP C	0.1UF	Z		
C112			CC73FCH1H470J	CHIP C	47PF	J		
C113			CK73FF1E104Z	CHIP C	0.1UF	Z		
C114			CE04EW1E4R7M	ELECTRO	4.7UF	25WV		
C115			CE04EW1H010M	ELECTRO	1.0UF	50WV		
C116			CE04EW1H0R1M	ELECTRO	0.1UF	50WV		
C117			CE04EW1C100M	ELECTRO	10UF	16WV		
C118			CE04EW1H010M	ELECTRO	1.0UF	50WV		
C119			CK73FB1E103K	CHIP C	0.01UF	K		
C120			CE04EW1E4R7M	ELECTRO	4.7UF	25WV		
C121			CE04EW1C100M	ELECTRO	10UF	16WV		
C122			CE04EW1A101M	ELECTRO	100UF	10WV		
C123			CE04EW1A470M	ELECTRO	47UF	10WV		
C124			CE04EW1C100M	ELECTRO	10UF	16WV		
C125			CK73FB1E103K	CHIP C	0.01UF	K		
C126			CK73FF1C105Z	CHIP C	1.0UF	Z		
C127			CE04EW1A101M	ELECTRO	100UF	10WV		
C128			CK73FF1C105Z	CHIP C	1.0UF	Z		

L:Scandinavia K:USA P:Canada
Y:PX(Far East, Hawaii) T:England E:Europe
Y:AAFES(Europe) X:Australia M:Other Areas

TS-450S : K,X,P,E,E2,M,M2
TS-690S : K,X,P,E,E2,M

⚠ indicates safety critical components.

PARTS LIST

× New Parts
Parts without Parts No. are not supplied.
Les articles non mentionnes dans le Parts No. ne sont pas fournis.
Teile ohne Parts No. werden nicht geliefert.

IF UNIT (X48-3090-XX)

Ref. No. 参照番号	Address 位置	New Parts 新	Parts No. 部品番号	Description 部品名／規格	Destination 仕向	Remarks 備考
C129			CK73FB1E103K	CHIP C 0.01UF K		
C130			CC73FSL1H471J	CHIP C 47PF J		
C131			CK73FB1E223K	CHIP C 0.022UF K		
C132			CK73FF1E104Z	CHIP C 0.1UF Z		
C133			CE04EW1A101M	ELECTRO 100UF 10WV		
C134			CK73FF1E104Z	CHIP C 0.1UF Z		
C135-137			CK73FB1E104K	CHIP C 0.10UF K		
C136,137			CK73FB1E104K	CHIP C 0.10UF K		
C138			CK73FF1E104Z	CHIP C 0.1UF Z		
C139			CK73FB1H102K	CHIP C 1000PF K		
C140			CK73FB1E473K	CHIP C 0.047UF K		
C141			CC73FCH1H101J	CHIP C 100PF J		
C142			CK73FB1E104K	CHIP C 0.1UF K		
C143,144			CK73FF1E104Z	CHIP C 0.1UF Z		
C145			CE04EW1A101M	ELECTRO 100UF 10WV		
C146			CK73FF1C105Z	CHIP C 1.0UF Z		
C147			CE04EW1A220M	ELECTRO 2.2UF 10WV		
C148			CK73FB1E103K	CHIP C 0.01UF K		
C149			CK73FB1E104K	CHIP C 0.10UF K		
C150			CE04EW1A470M	ELECTRO 47UF 10WV		
C151			CK73FB1E103K	CHIP C 0.01UF K		
C152			CE04EW1A470M	ELECTRO 47UF 10WV		
C153			CE04EW1C100M	ELECTRO 10UF 16WV		
C154			CE04EW1C220M	ELECTRO 22UF 16WV		
C155			CE04EW1H2R2M	ELECTRO 2.2UF 50WV		
C156			CE04EW1H010M	ELECTRO 1.0UF 50WV		
C157			CE04EW1A101M	ELECTRO 100UF 10WV		
C158			CK73FB1E103K	CHIP C 0.01UF K		
C159-162			CK73FB1H102K	CHIP C 1000PF K		
C163			CK73FB1E103K	CHIP C 0.01UF K		
C164			CE04EW1C100M	ELECTRO 10UF 16WV		
C165			CK73FF1C105Z	CHIP C 1.0UF Z		
C166			CE04EW1C100M	ELECTRO 10UF 16WV		
C167			CE04EW1E4R7M	ELECTRO 4.7UF 25WV		
C168			CE04EW1A101M	ELECTRO 100UF 10WV		
C169			CE04EW1C100M	ELECTRO 10UF 16WV		
C170,171			CE04EW1E4R7M	ELECTRO 4.7UF 25WV		
C172,173			CC73FCH1H101J	CHIP C 100PF J		
C174			CK73FB1H222K	CHIP C 2200PF K		
C175			CK73FF1C105Z	CHIP C 1.0UF Z		
C176			CK73FF1E104Z	CHIP C 0.1UF Z		
C177			CC73FCH1H101J	CHIP C 100PF J		
C178			CE04EW1A101M	ELECTRO 100UF 10WV		
C179			CE04EW1C100M	ELECTRO 10UF 16WV		
C180			CK73FB1E473K	CHIP C 0.047UF K		
C181			CE04EW1C100M	ELECTRO 10UF 16WV		
C183			CK73FB1E103K	CHIP C 0.01UF K		
C184			CE04EW1A101M	ELECTRO 100UF 10WV		
C185			CK73FB1E103K	CHIP C 0.01UF K		
C186,187			CE04EW1E4R7M	ELECTRO 4.7UF 25WV		
C188			CK73FB1E103K	CHIP C 0.01UF K		
C189			CK73FF1E104Z	CHIP C 0.1UF Z		
C190			CE04EW1E4R7M	ELECTRO 4.7UF 25WV		
C191			CK73FF1E104Z	CHIP C 0.1UF Z		
C192,193			CK73FB1H102K	CHIP C 1000PF K		

L:Scandinavia K:USA P:Canada
Y:PX(Far East, Hawaii) T:England E:Europe
Y:AAFES(Europe) X:Australia M:Other Areas

TS-450S : K,X,P,E,E2,M,M2
TS-690S : K,X,P,E,E2,M

⚠ indicates safety critical components.

PARTS LIST

* New Parts
Parts without Parts No. are not supplied.
Les articles non mentionnes dans le Parts No. ne sont pas fournis.
Telle ohne Parts No. werden nicht geliefert.

IF UNIT (X48-3090-XX)

Ref. No. 参照番号	Address 位置	New Parts 新	Parts No. 部品番号	Description 部品名／規格	Destination 仕向	Remarks 備考
C194		*	CK45FE2H222P	CERAMIC 2200PF P		
C195-198			CK73FB1E103K	CHIP C 0.01UF K		
C199-203			CK73FB1H102K	CHIP C 1000PF K		
C204			CK73FB1E104K	CHIP C 0.10UF K		
C205			CK73FB1E123K	CHIP C 0.012UF K		
C206-208			CK73FB1E103K	CHIP C 0.01UF K		
C209			CE04EW1C100M	ELECTRO 10UF 16WV		
C210			CE04EW1A101M	ELECTRO 100UF 10WV		
C211			CE04EW1A470M	ELECTRO 47UF 10WV		
C212			CE04EW1C100M	ELECTRO 10UF 16WV		
C213			CK73FB1H102K	CHIP C 1000PF K		
C214			CE04EW1HR47M	ELECTRO 0.47UF 50WV		
C215			CK73FB1E103K	CHIP C 0.01UF K		
C216			CE04EW1A101M	ELECTRO 100UF 10WV		
C217			CC73FCH1H101J	CHIP C 100PF J		
C218			CE04EW1A101M	ELECTRO 100UF 10WV		
C219,220			CK73FF1C105Z	CHIP C 1.0UF Z		
C221			CE04EW1C100M	ELECTRO 10UF 16WV		
C222			CK73FB1E103K	CHIP C 0.01UF K		
C223			CE04EW1H4R7M	ELECTRO 4.7UF 50WV		
C224			CK73FB1E103K	CHIP C 0.01UF K		
C225			CE04NW1C220M	ELECTRO 22UF 16WV		
C227			CK73FB1E103K	CHIP C 0.01UF K		
CN1			E40-5348-05	PIN CONNECTOR (15P STRAIGHT)		
CN2 ,3			E40-3237-05	PIN CONNECTOR (2P)		
CN4			E40-3241-05	PIN CONNECTOR (6P)		
CN5			E40-5066-05	PIN CONNECTOR (9P)		
CN6			E40-3240-05	PIN CONNECTOR (5P)		
CN7		*	E40-5426-05	PIN CONNECTOR (20P STRAIGHT)		
CN8			E40-3241-05	PIN CONNECTOR (6P)		
CN9			E40-3237-05	PIN CONNECTOR (2P)		
CN10			E40-3241-05	PIN CONNECTOR (6P)		
CN11			E40-3239-05	PIN CONNECTOR (4P)		
CN12			E40-3237-05	PIN CONNECTOR (2P)		
CN13			E40-3238-05	PIN CONNECTOR (3P)		
CN14,15			E40-3237-05	PIN CONNECTOR (2P)		
CN16			E40-3241-05	PIN CONNECTOR (6P)		
CN17,18			E40-5059-05	PIN CONNECTOR (OPTION FILTER)		
J1			E11-0414-05	PHONE JACK (EXT.SP)		
J2			E06-1352-05	CYLINDRICAL RECEPTACLE(PACKET		
J3			E06-0752-05	CYLINDRICAL RECEPTACLE(REMOTE		
J4			E11-0438-05	PHONE JACK (KYE)		
J5			E06-1352-05	CYLINDRICAL RECEPTACLE(PACKET		
J6 ,7			E13-0166-05	PHONO JACK (DSP2)		
A1		*	F01-0989-04	HEAT SINK		
A2			G02-0574-04	FLAT SPRING		
A3 ,4			J32-0761-04	STUD		
A5 ,6			N30-3010-46	PAN HEAD MACHINE SCREW		
CF1			L72-0315-05	CERAMIC FILTER 12KHZ		
CF2			L72-0319-05	CERAMIC FILTER 6KHZ		
CF3			L72-0371-05	CERAMIC FILTER 2.4KHZ		
L1			L34-2121-05	COIL		
L2 -4			L33-0712-05	CHOKE COIL 6.8UH		

L:Scandinavia K:USA P:Canada
Y:PX(Far East, Hawaii) T:England E:Europe
Y:AAFES(Europe) X:Australia M:Other Areas

TS-450S : K,X,P,E,E2,M,M2
TS-690S : K,X,P,E,E2,M

⚠ indicates safety critical components.

PARTS LIST

× New Parts
Parts without Parts No. are not supplied.
Les articles non mentionnes dans le Parts No. ne sont pas fournis.
Teile ohne Parts No. werden nicht geliefert.

IF UNIT (X48-3090-XX)

Ref. No. 参照番号	Address 位置	New Parts 新	Parts No. 部品番号	Description 部品名／規格	Destination 仕向	Remarks 備考
L5		*	L34-2005-05	COIL		
L6			L34-2124-05	COIL		
L7			L34-0945-05	COIL		
L8			L33-0712-05	CHOKE COIL 6.8UH		
L9			L34-4015-05	COIL		
L10 ,11			L40-1021-15	SMALL FIXED INDUCTOR 1MH		
L12			L40-1092-12	SMALL FIXED INDUCTOR 1UH		
L13			L40-1021-15	SMALL FIXED INDUCTOR 1MH		
L14			L40-1011-15	SMALL FIXED INDUCTOR 100UH		
L15			L40-1021-15	SMALL FIXED INDUCTOR 1MH		
L16			L40-1011-15	SMALL FIXED INDUCTOR 100UH		
L17			L40-1001-15	SMALL FIXED INDUCTOR 10UH		
L18			L40-4701-15	SMALL FIXED INDUCTOR 47UH		
L19 ,20			L40-1011-12	SMALL FIXED INDUCTOR 100UH		
L21 -23			L40-1011-15	SMALL FIXED INDUCTOR 100UH		
R1			RK73FB2A103J	CHIP R 10K J 1/10W		
R2			RK73FB2A333J	CHIP R 33K J 1/10W		
R3			RK73FB2A104J	CHIP R 100K J 1/10W		
R4			RK73FB2A471J	CHIP R 470 J 1/10W		
R5			RK73FB2A101J	CHIP R 100 J 1/10W		
R6			RK73FB2A102J	CHIP R 1.0K J 1/10W		
R7			RK73FB2A152J	CHIP R 1.5K J 1/10W		
R8			RK73FB2A471J	CHIP R 470 J 1/10W		
R9			RK73FB2A101J	CHIP R 100 J 1/10W		
R10			RK73FB2A272J	CHIP R 2.7K J 1/10W		
R11			RK73FB2A101J	CHIP R 100 J 1/10W		
R12			RK73FB2A272J	CHIP R 2.7K J 1/10W		
R13			RK73FB2A101J	CHIP R 100 J 1/10W		
R14			RK73FB2A472J	CHIP R 4.7K J 1/10W		
R15			RK73FB2A101J	CHIP R 100 J 1/10W		
R16			RK73FB2A272J	CHIP R 2.7K J 1/10W		
R17			RK73FB2A101J	CHIP R 100 J 1/10W		
R18			RK73FB2A472J	CHIP R 4.7K J 1/10W		
R19			RK73FB2A101J	CHIP R 100 J 1/10W		
R20			RK73FB2A272J	CHIP R 2.7K J 1/10W		
R21			RK73FB2A101J	CHIP R 100 J 1/10W		
R22			RK73FB2A272J	CHIP R 2.7K J 1/10W		
R23			RK73FB2A101J	CHIP R 100 J 1/10W		
R24			RK73FB2A272J	CHIP R 2.7K J 1/10W		
R25			RK73FB2A473J	CHIP R 47K J 1/10W		
R26			RK73FB2A152J	CHIP R 1.5K J 1/10W		
R27			RK73FB2A473J	CHIP R 47K J 1/10W		
R28 ,29			RK73FB2A152J	CHIP R 1.5K J 1/10W		
R30			RK73FB2A103J	CHIP R 10K J 1/10W		
R31			RK73FB2A333J	CHIP R 33K J 1/10W		
R32			RK73FB2A104J	CHIP R 100K J 1/10W		
R33			RK73FB2A471J	CHIP R 470 J 1/10W		
R34			RK73FB2A101J	CHIP R 100 J 1/10W		
R35			RK73FB2A472J	CHIP R 4.7K J 1/10W		
R36			RK73FB2A103J	CHIP R 10K J 1/10W		
R37			RK73FB2A332J	CHIP R 3.3K J 1/10W		
R38			RK73FB2A102J	CHIP R 1.0K J 1/10W		
R39			RK73FB2A101J	CHIP R 100 J 1/10W		
R40			RK73FB2A333J	CHIP R 33K J 1/10W		
R41			RK73FB2A104J	CHIP R 100K J 1/10W		

L:Scandinavia K:USA P:Canada
Y:PX(Far East, Hawaii) T:England E:Europe
Y:AAFES(Europe) X:Australia M:Other Areas

TS-450S : K,X,P,E,E2,M,M2
TS-690S : K,X,P,E,E2,M

⚠ indicates safety critical components.

PARTS LIST

* New Parts
Parts without Parts No. are not supplied.
Les articles non mentionnes dans le Parts No. ne sont pas fournis.
Teile ohne Parts No. werden nicht geliefert.

IF UNIT (X48-3090-XX)

Ref. No. 参照番号	Address 位置	New Parts 新	Parts No. 部品番号	Description 部品名／規格				Destination 仕向	Remarks 備考
R42			RK73FB2A471J	CHIP R	470	J	1/10W		
R43			RK73FB2A101J	CHIP R	100	J	1/10W		
R44			RK73FB2A224J	CHIP R	220K	J	1/10W		
R45 ,46			RK73FB2A101J	CHIP R	100	J	1/10W		
R47			RK73FB2A222J	CHIP R	2.2K	J	1/10W		
R48			RK73FB2A103J	CHIP R	10K	J	1/10W		
R49			RK73FB2A102J	CHIP R	1.0K	J	1/10W		
R50			RK73FB2A334J	CHIP R	330K	J	1/10W		
R51 ,52			RK73FB2A105J	CHIP R	1.0M	J	1/10W		
R53			RK73FB2A101J	CHIP R	100	J	1/10W		
R54			RK73FB2A102J	CHIP R	1.0K	J	1/10W		
R55			RK73FB2A473J	CHIP R	47K	J	1/10W		
R56			RK73FB2A104J	CHIP R	100K	J	1/10W		
R57			RK73FB2A101J	CHIP R	100	J	1/10W		
R58			RK73FB2A472J	CHIP R	4.7K	J	1/10W		
R59			RK73FB2A682J	CHIP R	6.8K	J	1/10W		
R60			RK73FB2A562J	CHIP R	5.6K	J	1/10W		
R61			RK73FB2A104J	CHIP R	100K	J	1/10W		
R62			RK73FB2A101J	CHIP R	100	J	1/10W		
R63			RK73FB2A103J	CHIP R	10K	J	1/10W		
R64			RK73FB2A392J	CHIP R	3.9K	J	1/10W		
R65			RK73FB2A103J	CHIP R	10K	J	1/10W		
R66			RK73FB2A102J	CHIP R	1.0K	J	1/10W		
R67			RK73FB2A681J	CHIP R	680	J	1/10W		
R68			RK73FB2A121J	CHIP R	120	J	1/10W		
R69			RK73FB2A221J	CHIP R	220	J	1/10W	450S	
R70			RK73FB2A560J	CHIP R	56	J	1/10W		
R71 -74			RK73FB2A101J	CHIP R	100	J	1/10W		
R75 -78			RK73FB2A104J	CHIP R	100K	J	1/10W		
R79			RK73FB2A471J	CHIP R	470	J	1/10W		
R80			RK73FB2A152J	CHIP R	1.5K	J	1/10W		
R81			RK73FB2A472J	CHIP R	4.7K	J	1/10W		
R82			RK73FB2A183J	CHIP R	18K	J	1/10W		
R83			RK73FB2A103J	CHIP R	10K	J	1/10W		
R84			RK73FB2A473J	CHIP R	47K	J	1/10W		
R85			RK73FB2A272J	CHIP R	2.7K	J	1/10W		
R86			RK73FB2A392J	CHIP R	3.9K	J	1/10W		
R87			RK73FB2A224J	CHIP R	220K	J	1/10W		
R88			RK73FB2A153J	CHIP R	15K	J	1/10W		
R89			RK73FB2A334J	CHIP R	330K	J	1/10W		
R90 ,91			RK73FB2A153J	CHIP R	15K	J	1/10W		
R92 -94			RK73FB2A473J	CHIP R	47K	J	1/10W		
R95			RK73FB2A105J	CHIP R	1.0M	J	1/10W		
R96			RK73FB2A101J	CHIP R	100	J	1/10W		
R97			RK73FB2A102J	CHIP R	1.0K	J	1/10W		
R98			RK73FB2A273J	CHIP R	27K	J	1/10W		
R99			RK73FB2A473J	CHIP R	47K	J	1/10W		
R100,101			RK73FB2A104J	CHIP R	100K	J	1/10W		
R102			RK73FB2A472J	CHIP R	4.7K	J	1/10W		
R103			RK73FB2A562J	CHIP R	5.6K	J	1/10W		
R104			RK73FB2A335J	CHIP R	3.3M	J	1/10W		
R105			RK73FB2A103J	CHIP R	10K	J	1/10W		
R106			RK73FB2A153J	CHIP R	15K	J	1/10W		
R107,108			RK73FB2A123J	CHIP R	12K	J	1/10W		
R109			RK73FB2A101J	CHIP R	100	J	1/10W		

L:Scandinavia K:USA P:Canada
Y:PX(Far East, Hawaii) T:England E:Europe
Y:AAFES(Europe) X:Australia M:Other Areas

TS-450S : K,X,P,E,E2,M,M2
TS-690S : K,X,P,E,E2,M

⚠ indicates safety critical components.

PARTS LIST

× New Parts
Parts without Parts No. are not supplied.
Les articles non mentionnes dans le Parts No. ne sont pas fournis.
Teile ohne Parts No. werden nicht geliefert.

IF UNIT (X48-3090-XX)

Ref. No. 参照番号	Address 位置	New Parts 新	Parts No. 部品番号	Description 部品名／規格	Destination 仕向	Remarks 備考
R110,111			RK73FB2A472J	CHIP R 4.7K J 1/10W		
R112			RK73FB2A101J	CHIP R 100 J 1/10W		
R113			RK73FB2A224J	CHIP R 220K J 1/10W		
R114			RK73FB2A222J	CHIP R 2.2K J 1/10W		
R115			RK73FB2A223J	CHIP R 22K J 1/10W		
R116			RK73FB2A104J	CHIP R 100K J 1/10W		
R117			RK73FB2A222J	CHIP R 2.2K J 1/10W		
R118			RK73FB2A151J	CHIP R 150 J 1/10W		
R119			RK73FB2A821J	CHIP R 820 J 1/10W		
R120			RK73FB2A101J	CHIP R 100 J 1/10W		
R121			RK73FB2A332J	CHIP R 3.3K J 1/10W		
R122			RK73FB2A102J	CHIP R 1.0K J 1/10W		
R123			RK73FB2A103J	CHIP R 10K J 1/10W		
R124			RK73FB2A331J	CHIP R 330 J 1/10W		
R125,126			RK73FB2A2R2J	CHIP R 2.2 J 1/10W		
R127			RK73FB2A224J	CHIP R 220K J 1/10W		
R128			RK73FB2A473J	CHIP R 47K J 1/10W		
R129			RK73FB2A101J	CHIP R 100 J 1/10W		
R130			RK73FB2A102J	CHIP R 1.0K J 1/10W		
R131			RK73FB2A104J	CHIP R 100K J 1/10W		
R132			RK73FB2A472J	CHIP R 4.7K J 1/10W		
R133			RK73FB2A334J	CHIP R 330K J 1/10W		
R134			RK73FB2A102J	CHIP R 1.0K J 1/10W		
R135			RK73FB2A103J	CHIP R 10K J 1/10W		
R136			RK73FB2A472J	CHIP R 4.7K J 1/10W		
R137			RK73FB2A102J	CHIP R 1.0K J 1/10W		
R138			RK73FB2A105J	CHIP R 1.0M J 1/10W		
R139			RK73FB2A684J	CHIP R 680K J 1/10W		
R140			RK73FB2A222J	CHIP R 2.2K J 1/10W		
R141			RK73FB2A335J	CHIP R 3.3M J 1/10W		
R142			RK73FB2A472J	CHIP R 4.7K J 1/10W		
R143			RK73FB2A102J	CHIP R 1.0K J 1/10W		
R144			RK73FB2A103J	CHIP R 10K J 1/10W		
R145			RK73FB2A102J	CHIP R 1.0K J 1/10W		
R146			RK73FB2A474J	CHIP R 470K J 1/10W		
R147			RK73FB2A104J	CHIP R 100K J 1/10W		
R148			RK73FB2A153J	CHIP R 15K J 1/10W		
R149			RK73FB2A223J	CHIP R 22K J 1/10W		
R150			RK73FB2A562J	CHIP R 5.6K J 1/10W		
R151			RK73FB2A332J	CHIP R 3.3K J 1/10W		
R152			RK73FB2A101J	CHIP R 100 J 1/10W		
R153			RK73FB2A821J	CHIP R 820 J 1/10W		
R154			RK73FB2A103J	CHIP R 10K J 1/10W		
R155			RK73FB2A123J	CHIP R 12K J 1/10W		
R156			RK73FB2A224J	CHIP R 220K J 1/10W		
R157			RK73FB2A472J	CHIP R 4.7K J 1/10W		
R158			RK73FB2A101J	CHIP R 100 J 1/10W		
R159			RK73FB2A102J	CHIP R 1.0K J 1/10W		
R160			RK73FB2A473J	CHIP R 47K J 1/10W		
R161			RK73FB2A472J	CHIP R 4.7K J 1/10W		
R162			RK73FB2A334J	CHIP R 330K J 1/10W		
R163			RK73FB2A124J	CHIP R 120K J 1/10W		
R164			RK73FB2A103J	CHIP R 10K J 1/10W		
R165			RK73FB2A470J	CHIP R 47 J 1/10W		
R166			RK73FB2A222J	CHIP R 2.2K J 1/10W		

L:Scandinavia K:USA P:Canada
Y:PX(Far East, Hawaii) T:England E:Europe
Y:AAFES(Europe) X:Australia M:Other Areas

TS-450S : K,X,P,E,E2,M,M2
TS-690S : K,X,P,E,E2,M

⚠ indicates safety critical components.

PARTS LIST

× New Parts
Parts without Parts No. are not supplied.
Les articles non mentionnes dans le Parts No. ne sont pas fournis.
Teile ohne Parts No. werden nicht geliefert.

IF UNIT (X48-3090-XX)

Ref. No. 参照番号	Address 位置	New Parts 新	Parts No. 部品番号	Description 部品名／規格	Destination 仕向	Remarks 備考
R167,168			RK73FB2A471J	CHIP R 470 J 1/10W		
R169			RK73FB2A224J	CHIP R 220K J 1/10W		
R170			RK73FB2A333J	CHIP R 33K J 1/10W		
R171			RK73FB2A224J	CHIP R 220K J 1/10W		
R172			RK73FB2A472J	CHIP R 4.7K J 1/10W		
R173,174			RK73FB2A101J	CHIP R 100 J 1/10W		
R175,176			RK73FB2A103J	CHIP R 10K J 1/10W		
R177			RK73FB2A102J	CHIP R 1.0K J 1/10W		
R178			RK73FB2A222J	CHIP R 2.2K J 1/10W		
R179			RK73FB2A332J	CHIP R 3.3K J 1/10W		
R180			RK73FB2A101J	CHIP R 100 J 1/10W		
R181			RK73FB2A222J	CHIP R 2.2K J 1/10W		
R182			RK73FB2A124J	CHIP R 120K J 1/10W		
R183			RK73FB2A101J	CHIP R 100 J 1/10W		
R184			RK73FB2A223J	CHIP R 22K J 1/10W		
R185			RK73FB2A221J	CHIP R 220 J 1/10W		
R186			RK73FB2A471J	CHIP R 470 J 1/10W		
R187,188			RK73FB2A103J	CHIP R 10K J 1/10W		
R189			RK73FB2A472J	CHIP R 4.7K J 1/10W		
R190			RK73FB2A103J	CHIP R 10K J 1/10W		
R191			RK73FB2A104J	CHIP R 100K J 1/10W		
R192			RK73FB2A471J	CHIP R 470 J 1/10W		
R193			RK73FB2A104J	CHIP R 100K J 1/10W		
R194-195			RK73FB2A103J	CHIP R 10K J 1/10W		
R196			RK73FB2A472J	CHIP R 4.7K J 1/10W		
R197-199			RK73FB2A104J	CHIP R 100K J 1/10W		
R200			RK73FB2A123J	CHIP R 12K J 1/10W		
R201,202			RK73FB2A104J	CHIP R 100K J 1/10W		
R203			RK73FB2A222J	CHIP R 2.2K J 1/10W		
R204			RK73FB2A104J	CHIP R 100K J 1/10W		
R205			RK73FB2A153J	CHIP R 15K J 1/10W		
R206-208			RK73FB2A222J	CHIP R 2.2K J 1/10W		
R209			RK73FB2A103J	CHIP R 10K J 1/10W		
R210			RK73FB2A104J	CHIP R 100K J 1/10W		
R211			RK73FB2A103J	CHIP R 10K J 1/10W		
R212			RK73FB2A222J	CHIP R 2.2K J 1/10W		
R213			RK73FB2A103J	CHIP R 10K J 1/10W		
R214			RK73FB2A104J	CHIP R 100K J 1/10W		
R215			RK73FB2A333J	CHIP R 33K J 1/10W		
R216			RK73FB2A223J	CHIP R 22K J 1/10W		
R217			RK73FB2A472J	CHIP R 4.7K J 1/10W		
R218,219			RK73FB2A103J	CHIP R 10K J 1/10W		
R220			RK73FB2A104J	CHIP R 100K J 1/10W		
R221			RK73FB2A562J	CHIP R 5.6K J 1/10W		
R222			RK73FB2A822J	CHIP R 8.2K J 1/10W		
R223			RK73FB2A823J	CHIP R 82K J 1/10W		
R224			RK73FB2A472J	CHIP R 4.7K J 1/10W		
R225			RK73FB2A101J	CHIP R 100 J 1/10W		
R226			RK73FB2A472J	CHIP R 4.7K J 1/10W		
R227			RK73FB2A332J	CHIP R 3.3K J 1/10W		
R228			RK73FB2A101J	CHIP R 100 J 1/10W		
R229			RK73FB2A474J	CHIP R 470K J 1/10W		
R230			RK73FB2A101J	CHIP R 100 J 1/10W		
R231			RK73FB2A821J	CHIP R 820 J 1/10W		
R232			RK73FB2A223J	CHIP R 22K J 1/10W		

L:Scandinavia K:USA P:Canada
Y:PX(Far East, Hawaii) T:England E:Europe
Y:AAFES(Europe) X:Australia M:Other Areas

TS-450S : K,X,P,E,E2,M,M2
TS-690S : K,X,P,E,E2,M

⚠ indicates safety critical components.

PARTS LIST

× New Parts
Parts without Parts No. are not supplied.
Les articles non mentionnes dans le Parts No. ne sont pas fournis.
Teile ohne Parts No. werden nicht geliefert.

IF UNIT (X48-3090-XX)

Ref. No. 参照番号	Address 位置	New Parts 新	Parts No. 部品番号	Description 部品名／規格	Destination 仕向	Remarks 備考
R233			RK73FB2A103J	CHIP R 10K J 1/10W		
R234			RK73FB2A102J	CHIP R 1.0K J 1/10W		
R235-237			RK73FB2A103J	CHIP R 10K J 1/10W		
R238			RK73FB2A101J	CHIP R 100 J 1/10W		
R239			RK73FB2A335J	CHIP R 3.3M J 1/10W		
R240			RK73FB2A102J	CHIP R 1.0K J 1/10W		
R241			RK73FB2A824J	CHIP R 820K J 1/10W		
R242			RK73FB2A564J	CHIP R 560K J 1/10W		
R243			RK73FB2A822J	CHIP R 8.2K J 1/10W		
R244			RK73FB2A272J	CHIP R 2.7K J 1/10W		
R245			RK73FB2A104J	CHIP R 100K J 1/10W		
R246			RK73FB2A101J	CHIP R 100 J 1/10W		
R247			R92-0670-05	CHIP R 0 ΩHM		
R248			RK73FB2A333J	CHIP R 33K J 1/10W		
R249			RK73FB2A103J	CHIP R 10K J 1/10W		
R250			RK73FB2A473J	CHIP R 47K J 1/10W		
R251			RK73FB2A101J	CHIP R 100 J 1/10W		
R252			RK73FB2A104J	CHIP R 100K J 1/10W		
R253			RK73FB2A103J	CHIP R 10K J 1/10W		
R254			RK73FB2A102J	CHIP R 1.0K J 1/10W		
R255,256			RK73FB2A473J	CHIP R 47K J 1/10W		
R257			RK73FB2A104J	CHIP R 100K J 1/10W		
R258			RK73FB2A102J	CHIP R 1.0K J 1/10W		
R259			RK73FB2A473J	CHIP R 47K J 1/10W		
R260			RK73FB2A104J	CHIP R 100K J 1/10W		
R261			RK73FB2A102J	CHIP R 1.0K J 1/10W		
R262			RK73FB2A225J	CHIP R 2.2M J 1/10W		
R263			RK73FB2A224J	CHIP R 220K J 1/10W		
R264			RK73FB2A562J	CHIP R 5.6K J 1/10W		
R265			RK73FB2A221J	CHIP R 220 J 1/10W		
R266			RK73FB2A152J	CHIP R 1.5K J 1/10W		
R267			RK73FB2A103J	CHIP R 10K J 1/10W		
R269			RK73FB2A103J	CHIP R 10K J 1/10W		
R270			RK73FB2A104J	CHIP R 100K J 1/10W		
R271			RK73FB2A822J	CHIP R 8.2K J 1/10W	690S	
R273			RK73FB2A471J	CHIP R 470 J 1/10W		
R275			RK73FB2A101J	CHIP R 100 J 1/10W		
R276			RK73FB2A471J	CHIP R 470 J 1/10W		
R277			RK73FB2A101J	CHIP R 100 J 1/10W		
R278			RK73FB2A153J	CHIP R 15K J 1/10W		
R279			RK73FB2A272J	CHIP R 2.7K J 1/10W		
R280		*	RD14CB2E102J	RD 1.0K J 1/4W		
R281			RK73FB2A101J	CHIP R 100 J 1/10W		
R282			RK73FB2A102J	CHIP R 1.0K J 1/10W		
R283			RK73FB2A103J	CHIP R 10K J 1/10W		
R284,285			RK73FB2A101J	CHIP R 100 J 1/10W		
R286			RK73FB2A103J	CHIP R 10K J 1/10W		
R287			RK73FB2A104J	CHIP R 100K J 1/10W		
R288			RK73FB2A223J	CHIP R 22K J 1/10W		
R289			RK73FB2A562J	CHIP R 5.6K J 1/10W		
R290			RK73FB2A561J	CHIP R 560 J 1/10W		
R291,292			RK73FB2A103J	CHIP R 10K J 1/10W		
R293,294			RK73FB2A104J	CHIP R 100K J 1/10W		
R295			RK73FB2A472J	CHIP R 4.7K J 1/10W		
R297			RK73FB2A104J	CHIP R 100K J 1/10W		

L:Scandinavia K:USA P:Canada
Y:PX(Far East, Hawaii) T:England E:Europe
Y:AAFES(Europe) X:Australia M:Other Areas

TS-450S : K,X,P,E,E2,M,M2
TS-690S : K,X,P,E,E2,M

⚠ indicates safety critical components.

PARTS LIST

* New Parts
Parts without Parts No. are not supplied.
Les articles non mentionnes dans le Parts No. ne sont pas fournis.
Teile ohne Parts No. werden nicht geliefert.

IF UNIT (X48-3090-XX)

Ref. No. 参照番号	Address 位置	New Parts 新	Parts No. 部品番号	Description 部品名／規格	Destination 仕向	Remarks 備考
VR1		*	R12-6738-05	TRIMMING POT.4.7K(IF)		
VR2			R12-6740-05	TRIMMING POT. 10K(NOTCH)		
VR3		*	R12-6738-05	TRIMMING POT.4.7K(IF)		
VR4			R12-6744-05	TRIMMING POT. 47K(FM SM)		
VR5		*	R12-6734-05	TRIMMING POT. 1K(REF)		
VR6			R12-6744-05	TRIMMING POT. 47K(FM SM)		
VR7		*	R12-6734-05	TRIMMING POT. 1K(SIDE TONE)		
VR8		*	R12-6738-05	TRIMMING POT.4.7K(IF)		
VR9			R12-6740-05	TRIMMING POT. 10K(NOTCH)		
VR10			R12-6742-05	TRIMMING POT. 22K(RF GAIN)		
VR11-13			R12-6740-05	TRIMMING POT. 10K(NOTCH)		
VR14			R12-6740-05	TRIMMING POT. 10K(ALC)		
VR15 ,16			R12-6744-05	TRIMMING POT. 47K(VSF)		
VR17			R12-6746-05	TRIMMING POT.100K(50M 50W)	690S	
VR18		*	R12-6732-05	TRIMMING POT. 470(MIN)		
VR19		*	R12-6748-05	TRIMMING POT.220K(50W)		
VR20		*	R12-6746-05	TRIMMING POT.100K(50W)		
VR21 ,22			R12-6744-05	TRIMMING POT. 47K(FM SM)		
VR23			R12-6740-05	TRIMMING POT. 10K(NOTCH)		
VR24			R12-3410-05	TRIMMING POT. 10K		
VR25		*	R12-0443-05	TRIMMING POT. 330		
K1			S51-1420-05	RELAY		
S1			S31-1411-05	SLIDE SWITCH		
D1 ,2			RLS135	DIODE		
D3 ,4			DAP236(K)	DIODE		
D5 -13			RLS135	DIODE		
D14			DAN202K	DIODE		
D15			1N60	DIODE		
D16 -18			RLS73	DIODE		
D19			RLZ5.1A	DIODE		
D20			RLS73	DIODE		
D21			HSM88AS	DIODE		
D22			DAP202(K)	DIODE		
D23			DAN202K	DIODE		
D24 ,25			RLS73	DIODE		
D26			HSM88AS	DIODE		
D27 ,28			RLS73	DIODE		
D29			DAN202K	DIODE		
D30 ,31			HSM88AS	DIODE		
D32			LFB01	DIODE		
D33			RLS73	DIODE		
D34 ,35			RLS135	DIODE		
D36			MI204	DIODE		
D37 -39			RLS73	DIODE		
D40			DAN202K	DIODE		
D41			RLS73	DIODE		
D42			RLZ5.1A	DIODE		
D43 -45			RLS73	DIODE		
D46			DAN202K	DIODE		
D48 -54			RLS73	DIODE		
D55			DAP202(K)	DIODE		
D56			DAN202K	DIODE		
D57			RLS73	DIODE		

L:Scandinavia K:USA P:Canada
Y:PX(Far East, Hawaii) T:England E:Europe
Y:AAFES(Europe) X:Australia M:Other Areas

TS-450S : K,X,P,E,E2,M,M2
TS-690S : K,X,P,E,E2,M

⚠ indicates safety critical components.

PARTS LIST

× New Parts
Parts without Parts No. are not supplied.
Les articles non mentionnes dans le Parts No. ne sont pas fournis.
Teile ohne Parts No. werden nicht geliefert.

IF UNIT (X48-3090-XX)

Ref. No. 参照番号	Address 位置	New Parts 新	Parts No. 部品番号	Description 部品名／規格	Destination 仕向	Remarks 備考
D58 ,59			DAN202K	DIODE		
D60			1SS101	DIODE		
D61			RLS73	DIODE		
D62		*	RLZ9.1B	DIODE		
D63			RLS73	DIODE		
D64			RLZ3.6B	DIODE		
D65		*	RLZ13B	DIODE		
D66 ,67			DAN202K	DIODE		
D69			DAN202K	DIODE		
D71			RLS73	DIODE		
D72			RLS73	DIODE	450S	
D73			MA110	DIODE		
D74			RLS73	DIODE		
D77			RLS73	DIODE		
IC1			UPC1037HA	IC(DUBBLE BALANCE MODULATOR)		
IC2			TC4066BF	IC(BILATERAL SWITCH X4)		
IC3			TC9174F	IC(CMOS I/O)		
IC4			MC3361D	IC(FM IF SYSTEM)		
IC5			UPC2002V	IC(OP AMP X2)		
IC6			NJM2904M	IC(OP AMP X2)		
IC7			TC4066BF	IC(BILATERAL SWITCH X4)		
IC8			AN612	IC(BALANCE MODULATOR)		
IC9			TC4S66F	IC(BILATERAL SWITCH)		
IC10			TC9174F	IC(CMOS I/O)		
IC11,12			TC4066BF	IC(BILATERAL SWITCH X4)		
IC13,14			TC4S66F	IC(BILATERAL SWITCH)		
IC15		*	UPC1313HA	IC		
IC16			NJM2902M	IC(OP AMP X4)		
Q1			DTC114EK	DIGITAL TRANSISTOR		
Q2 ,3			3SK131(M)	FET		
Q4 ,5			FMC2	TRANSISTOR		
Q6 ,7			DTC114EK	DIGITAL TRANSISTOR		
Q8			3SK131(M)	FET		
Q9 ,10			2SC2712(Y)	TRANSISTOR		
Q11			2SA1213(Y)	TRANSISTOR		
Q12			DTC124EK	DIGITAL TRANSISTOR		
Q13			DTA124EK	DIGITAL TRANSISTOR		
Q14			DTC114EK	DIGITAL TRANSISTOR		
Q15			DTA124EK	DIGITAL TRANSISTOR		
Q16			DTA124EK	DIGITAL TRANSISTOR	450S	
Q17			DTC114EK	DIGITAL TRANSISTOR	690S	
Q18			DTA124EK	DIGITAL TRANSISTOR		
Q19 -21			FMA5	TRANSISTOR		
Q22 -24			2SC2712(Y)	TRANSISTOR		
Q25			2SK210(GR)	FET		
Q26			2SA1162(Y)	TRANSISTOR		
Q27			DTC114EK	DIGITAL TRANSISTOR		
Q28			DTA124EK	DIGITAL TRANSISTOR		
Q29 ,30			2SC2712(Y)	TRANSISTOR		
Q31			2SD1757K(S)	TRANSISTOR		
Q32 ,33			2SC2712(Y)	TRANSISTOR		
Q34			DTC124EK	DIGITAL TRANSISTOR		
Q35			FMC2	TRANSISTOR		
Q36			2SC2712(Y)	TRANSISTOR		
Q37			DTC114EK	DIGITAL TRANSISTOR		

L:Scandinavia K:USA P:Canada
Y:PX(Far East, Hawaii) T:England E:Europe
Y:AAFES(Europe) X:Australia M:Other Areas

TS-450S : K,X,P,E,E2,M,M2
TS-690S : K,X,P,E,E2,M

⚠ indicates safety critical components.

PARTS LIST

× New Parts
Parts without Parts No. are not supplied.
Les articles non mentionnes dans le Parts No. ne sont pas fournis.
Teile ohne Parts No. werden nicht geliefert.

IF UNIT (X48-3090-XX)
PLL UNIT (X50-3150-XX)

Ref. No. 参照番号	Address 位置	New Parts 新	Parts No. 部品番号	Description 部品名／規格	Destination 仕向	Remarks 備考
Q38 ,39			2SC2712(Y)	TRANSISTOR		
Q40			DTA124EK	DIGITAL TRANSISTOR		
Q41			DTC114EK	DIGITAL TRANSISTOR		
Q42			DTD114EK	DIGITAL TRANSISTOR		
Q43			2SC3722K(S)	TRANSISTOR		
Q44			DTA124EK	DIGITAL TRANSISTOR		
Q45			DTA143EK	DIGITAL TRANSISTOR		
Q46			DTA124EK	DIGITAL TRANSISTOR		
Q47			DTC124EK	DIGITAL TRANSISTOR		
Q48			DTC114EK	DIGITAL TRANSISTOR		
Q49			FMC2	TRANSISTOR		
Q50 ,51			DTC114EK	DIGITAL TRANSISTOR		
Q52			2SA1162(Y)	TRANSISTOR		
Q53 ,54			DTC114EK	DIGITAL TRANSISTOR		
Q55			DTA114EK	DIGITAL TRANSISTOR		
Q56			2SA1162(Y)	TRANSISTOR		
Q57			DTC114EK	DIGITAL TRANSISTOR		
Q58			DTA143EK	DIGITAL TRANSISTOR	690S	
Q59			DTC114EK	DIGITAL TRANSISTOR		
Q60			2SC2712(Y)	TRANSISTOR		
Q61 ,62			DTA124EK	DIGITAL TRANSISTOR		
Q63 ,64			DTC114EK	DIGITAL TRANSISTOR		
Q65			DTB123EK	DIGITAL TRANSISTOR		
Q68 ,69			IMH5	TRANSISTOR		
Q70			DTC114EK	DIGITAL TRANSISTOR		
Q71			DTC114EK	DIGITAL TRANSISTOR	690	
Q72			FMC3	TRANSISTOR		
Q73			2SC2712(Y)	TRANSISTOR		
Q74 ,75			DTC114EK	DIGITAL TRANSISTOR		
Q76			DTA124EK	DIGITAL TRANSISTOR		
TH1			157-501-53009	THERMISTOR 500		
TH2			157-502-53002	THERMISTOR 5K		
PLL UNIT (X50-3150-XX) -00 : TS-690S -01 : TS-450S						
C1			CC73FUJ1H470J	CHIP C 47PF J		
C2			CK73FB1E103K	CHIP C 0.01UF K		
C3			CE04EW1A470M	ELECTRO 47UF 10WV		
C4			CC73FCH1H151J	CHIP C 150PF J		
C5			CC73FCH1H390J	CHIP C 39PF J		
C6			CC73FCH1H020C	CHIP C 2.0PF C		
C7			CK73FB1E103K	CHIP C 0.01UF K		
C8			CE04EW1A470M	ELECTRO 47UF 10WV		
C9			CC73FCH1H050C	CHIP C 5PF C		
C10 -17			CK73FB1E103K	CHIP C 0.01UF K		
C18			CC73FCH1H820J	CHIP C 82PF J		
C19			CC73FSL1H101J	CHIP C 100PF J		
C21			CK73FB1E103K	CHIP C 0.01UF K		
C22			CK73FB1H102K	CHIP C 1000PF K		
C23			CK73FB1H222K	CHIP C 2200PF K		
C24			CK73FB1E103K	CHIP C 0.01UF K		
C25			CE04EW1A470M	ELECTRO 47UF 10WV		
C26			CK73FF1E104Z	CHIP C 0.1UF Z		
C27			CK73FB1E103K	CHIP C 0.01UF K		
C28			CK73FF1E104Z	CHIP C 0.1UF Z		
C29			CE04EW1A470M	ELECTRO 47UF 10WV		

L:Scandinavia K:USA P:Canada
Y:PX(Far East, Hawaii) T:England E:Europe
Y:AAFES(Europe) X:Australia M:Other Areas

TS-450S : K,X,P,E,E2,M,M2
TS-690S : K,X,P,E,E2,M

⚠ indicates safety critical components.

PARTS LIST

× New Parts
Parts without Parts No. are not supplied.
Les articles non mentionnes dans le Parts No. ne sont pas fournis.
Teile ohne Parts No. werden nicht geliefert.

PLL UNIT (X50-3150-XX)

Ref. No. 参照番号	Address 位置	New Parts 新	Parts No. 部品番号	Description 部品名／規格			Destination 仕向	Remarks 備考
C30			CK73FF1E104Z	CHIP C	0.1UF	Z		
C31			CE04EW1A471M	ELECTRO	470UF	10WV		
C32 -35			CK73FB1H102K	CHIP C	1000PF	K		
C36			CK73FB1E103K	CHIP C	0.01UF	K		
C37			CE04EW1A471M	ELECTRO	470UF	10WV		
C38			C91-0119-05	CERAMIC	0.047UF	K		
C39			CC73FRH1H680J	CHIP C	68PF	J		
C40			CC73FCH1H330J	CHIP C	33PF	J		
C41			CK73FB1H102K	CHIP C	1000PF	K		
C42 ,43			CC73FCH1H120J	CHIP C	12PF	J		
C44			CK73FB1H102K	CHIP C	1000PF	K		
C45			CC73FRH1H680J	CHIP C	68PF	J		
C46			CC73FCH1H330J	CHIP C	33PF	J		
C47			CK73FB1H102K	CHIP C	1000PF	K		
C48			CC73FCH1H120J	CHIP C	12PF	J		
C49			CC73FCH1H150J	CHIP C	15PF	J		
C50			CK73FB1H102K	CHIP C	1000PF	K		
C52			CC73FCH1H330J	CHIP C	33PF	J		
C53			CK73FB1H102K	CHIP C	1000PF	K		
C54			CC73FCH1H100D	CHIP C	10PF	D		
C55			CC73FCH1H150J	CHIP C	15PF	J		
C56			CK73FB1H102K	CHIP C	1000PF	K		
C57			CC73FRH1H820J	CHIP C	82PF	J	690S	
C58			CC73FCH1H330J	CHIP C	33PF	C	690S	
C59			CK73FB1H102K	CHIP C	1000PF	K	690S	
C60			CC73FCH1H050C	CHIP C	5PF	C	690S	
C61			CC73FCH1H080D	CHIP C	8PF	D	690S	
C62			CK73FB1H102K	CHIP C	1000PF	K	690S	
C63			C91-0119-05	CERAMIC	0.047UF	K		
C64 -66			CK73FB1H102K	CHIP C	1000PF	K		
C67			CC73FCH1H010C	CHIP C	1PF	C		
C68			CC73FCH1H0R5C	CHIP C	0.5PF	C		
C69 ,70			CC73FCH1H070D	CHIP C	7PF	D		
C72 -77			CK73FB1H102K	CHIP C	1000PF	K		
C78 -81			CK73FB1E103K	CHIP C	0.01UF	K		
C82			CC73FB1H102K	CHIP C	1000PF	K		
C83			CC73FCH1H220J	CHIP C	22PF	J		
C84			CC73FCH1H020C	CHIP C	2.0PF	C		
C85			CC73FCH1H010C	CHIP C	1PF	C		
C86			CC73FCH1H090D	CHIP C	9PF	D		
C87			CC73FCH1H030C	CHIP C	3PF	C		
C88			CC73FCH1H020C	CHIP C	2.0PF	C		
C89			CC73FCH1H470J	CHIP C	47PF	J		
C90			CC73FCH1H220J	CHIP C	22PF	J		
C91			CC73FCH1H470J	CHIP C	47PF	J		
C92 -95			CK73FB1E103K	CHIP C	0.01UF	K		
C96			CC73FCH1H220J	CHIP C	22PF	J		
C97			CK73FB1E103K	CHIP C	0.01UF	K		
C98			CE04EW1A470M	ELECTRO	47UF	10WV		
C99			CK73FB1E103K	CHIP C	0.01UF	K		
C100,101			CK73FB1H102K	CHIP C	1000PF	K		
C102			CQ92M1H103K	MYLAR	0.010UF	K		
C103			C91-1083-05	FILM	0.47UF	63WV		
C104			CK73FB1E103K	CHIP C	0.01UF	K		
C105			CE04EW1A101M	ELECTRO	100UF	10WV		

L:Scandinavia K:USA P:Canada
Y:PX(Far East, Hawaii) T:England E:Europe
Y:AAFES(Europe) X:Australia M:Other Areas

TS-450S : K,X,P,E,E2,M,M2
TS-690S : K,X,P,E,E2,M

⚠ indicates safely critical components.

PARTS LIST

× New Parts
Parts without Parts No. are not supplied.
Les articles non mentionnes dans le Parts No. ne sont pas fournis.
Teile ohne Parts No. werden nicht gellefert.

PLL UNIT (X50-3150-XX)

Ref. No. 参照番号	Address 位置	New Parts 新	Parts No. 部品番号	Description 部品名／規格	Destination 仕向	Remarks 備考
C106			CK73FB1E103K	CHIP C 0.01UF K		
C107			CE04EW1A331M	ELECTRO 330UF 10WV		
C108-110			CK73FB1H102K	CHIP C 1000PF K		
C111			CC73FCH1H330J	CHIP C 33PF J		
C112			CC73FCH1H080D	CHIP C 8PF D		
C113			CC73FCH1H680J	CHIP C 68PF J		
C114			CK73FB1H102K	CHIP C 1000PF K		
C115			CK73FB1E103K	CHIP C 0.01UF K		
C116			CE04EW1A470M	ELECTRO 47UF 10WV		
C117			CK73FB1E103K	CHIP C 0.01UF K		
C118,119			CK73FB1H102K	CHIP C 1000PF K		
C120			CQ92M1H333K	MYLAR 0.033UF K		
C121			C91-1101-05	FILM 0.22UF 63WV		
C122			CK73FB1E103K	CHIP C 0.01UF K		
C123			CE04EW1A101M	ELECTRO 100UF 10WV		
C124			CK45B1H102K	CERAMIC 1000PF K		
C125			C92-0003-05	CHIP TAN 0.47UF 25WV		
C126			CK73FB1H102K	CHIP C 1000PF K		
C127-130			CC73FSL1H101J	CHIP C 100PF J		
C131,132			CK73FB1E103K	CHIP C 0.01UF K		
C133			CK73FB1H102K	CHIP C 1000PF K	690S	
C134			CK73FB1E103K	CHIP C 0.01UF K	690S	
C135			CC73FCH1H050C	CHIP C 5PF C	690S	
C136			CC73FCH1H040C	CHIP C 4PF C	690S	
C137			CC73FCH1H050C	CHIP C 5PF C	690S	
C138-142			CK73FB1E103K	CHIP C 0.01UF K	690S	
C143-145			CK73FB1H102K	CHIP C 1000PF K	690S	
C146			CC73FRH1H120J	CHIP C 12PF J	690S	
C148			CC73FRH1H120J	CHIP C 12PF J	690S	
C149			CK73FB1H102K	CHIP C 1000PF K	690S	
C151			CE04EW1A101M	ELECTRO 100UF 10WV		
C152			CC73FCH1H030C	CHIP C 3PF C		
C153			CK73FB1H102K	CHIP C 1000PF K		
C154			CC73FCH1H100D	CHIP C 10PF D		
C155			CK73FB1E103K	CHIP C 0.01UF K		
TC1			C05-0067-05	TRIMMING CAP (25PF)		
CN1			E40-3237-05	PIN CONNECTOR (2P)		
CN2			E40-5469-05	PIN CONNECTOR (12P)		
CN3 ,4			E04-0154-05	RF COAXIAL CABLE RECEPTACLE		
CN5			E40-3237-05	PIN CONNECTOR (2P)		
CN6 ,7			E04-0154-05	RF COAXIAL CABLE RECEPTACLE		
CN8			E40-3238-05	PIN CONNECTOR (3P)		
A1			F11-1140-04	SHIELDING CASE		
A2			F11-1141-04	SHIELDING COVER		
L1			L40-1011-14	SMALL FIXED INDUCTOR		
L2			L40-1501-17	SMALL FIXED INDUCTOR		
L3			L40-1001-17	SMALL FIXED INDUCTOR		
L4			L40-1011-14	SMALL FIXED INDUCTOR		
L5			L34-4000-05	COIL		
L6			L40-4791-19	SMALL FIXED INDUCTOR		
L7		*	L34-4286-05	COIL		
L8			L40-4791-19	SMALL FIXED INDUCTOR		
L9		*	L34-4286-05	COIL		

L:Scandinavia K:USA P:Canada
Y:PX(Far East, Hawaii) T:England E:Europe
Y:AAFES(Europe) X:Australia M:Other Areas

TS-450S : K,X,P,E,E2,M,M2
TS-690S : K,X,P,E,E2,M

⚠ indicates safety critical components.

PARTS LIST

* New Parts
Parts without Parts No. are not supplied.
Les articles non mentionnes dans le Parts No. ne sont pas fournis.
Teile ohne Parts No. werden nicht geliefert.

PLL UNIT (X50-3150-XX)

Ref. No. 参照番号	Address 位置	New Parts 新	Parts No. 部品番号	Description 部品名／規格	Destination 仕向	Remarks 備考
L10			L40-4791-19	SMALL FIXED INDUCTOR		
L11		*	L34-4287-05	COIL	690S	
L12			L40-4791-19	SMALL FIXED INDUCTOR	690S	
L13			L40-3982-17	SMALL FIXED INDUCTOR		
L14			L34-1163-05	COIL		
L15			L40-2292-17	SMALL FIXED INDUCTOR		
L16			L40-1592-17	SMALL FIXED INDUCTOR		
L17 ,18			L40-1501-17	SMALL FIXED INDUCTOR		
L19			L40-4701-17	SMALL FIXED INDUCTOR		
L21			L40-1011-14	SMALL FIXED INDUCTOR		
L22			L40-2282-17	SMALL FIXED INDUCTOR		
L23 -25			L40-4701-17	SMALL FIXED INDUCTOR		
L26 -28			L40-4701-17	SMALL FIXED INDUCTOR	690S	
L29			L40-3991-17	SMALL FIXED INDUCTOR	690S	
L30			L40-4701-17	SMALL FIXED INDUCTOR	690S	
L31 ,32			L34-4222-05	COIL	690S	
L33 -35			L33-0664-05	CHOKE COIL		
X1			L77-0963-05	CRYSTAL RESONATOR(20MHZ)		
-			N30-2604-41	PAN HEAD MACHINE SCREW		
R1			RK73FB2A101J	CHIP R 100 J 1/10W		
R2			RK73FB2A223J	CHIP R 22K J 1/10W		
R3			RK73FB2A103J	CHIP R 10K J 1/10W		
R4			RK73FB2A102J	CHIP R 1.0K J 1/10W		
R5			RK73FB2A101J	CHIP R 100 J 1/10W		
R6 ,7			RK73FB2A473J	CHIP R 47K J 1/10W		
R8			RK73FB2A101J	CHIP R 100 J 1/10W		
R9			RK73FB2A821J	CHIP R 820 J 1/10W		
R10 ,11			RK73FB2A101J	CHIP R 100 J 1/10W		
R12			RK73FB2A472J	CHIP R 4.7K J 1/10W		
R13			RK73FB2A103J.	CHIP R 10K J 1/10W		
R14			RK73FB2A471J	CHIP R 470 J 1/10W		
R15 ,16			RK73FB2A103J	CHIP R 10K J 1/10W		
R17			RK73FB2A471J	CHIP R 470 J 1/10W		
R18			RK73FB2A153J	CHIP R 15K J 1/10W		
R19			RK73FB2A103J	CHIP R 10K J 1/10W		
R20			RK73FB2A561J	CHIP R 560 J 1/10W		
R23			RK73FB2A272J	CHIP R 2.7K J 1/10W		
R24 ,25			RK73FB2A273J	CHIP R 27K J 1/10W		
R26			RK73FB2A103J	CHIP R 10K J 1/10W		
R27			RK73FB2A471J	CHIP R 470 J 1/10W		
R28			RK73FB2A220J	CHIP R 22 J 1/10W		
R29 -31			RK73FB2A223J	CHIP R 22K J 1/10W		
R32			RK73FB2A223J	CHIP R 22K J 1/10W	690S	
R33			RK73FB2A101J	CHIP R 100 J 1/10W		
R34			RK73FB2A105J	CHIP R 1.0M J 1/10W		
R35			RK73FB2A104J	CHIP R 100K J 1/10W		
R36			RK73FB2A473J	CHIP R 47K J 1/10W		
R37 ,38			RK73FB2A101J	CHIP R 100 J 1/10W		
R39			RK73FB2A105J	CHIP R 1.0M J 1/10W		
R40			RK73FB2A104J	CHIP R 100K J 1/10W		
R41			RK73FB2A473J	CHIP R 47K J 1/10W		
R42 ,43			RK73FB2A101J	CHIP R 100 J 1/10W		
R44			RK73FB2A105J	CHIP R 1.0M J 1/10W		
R45			RK73FB2A104J	CHIP R 100K J 1/10W		

L:Scandinavia K:USA P:Canada
Y:PX(Far East, Hawaii) T:England E:Europe
Y:AAFES(Europe) X:Australia M:Other Areas

TS-450S : K,X,P,E,E2,M,M2
TS-690S : K,X,P,E,E2,M

⚠ indicates safety critical components.

PARTS LIST

* New Parts
Parts without Parts No. are not supplied.
Les articles non mentionnes dans le Parts No. ne sont pas fournis.
Teile ohne Parts No. werden nicht geliefert.

PLL UNIT (X50-3150-XX)

Ref. No. 参照番号	Address 位置	New Parts 新	Parts No. 部品番号	Description 部品名／規格	Destination 仕向	Remarks 備考
R46			RK73FB2A473J	CHIP R 47K J 1/10W		
R47			RK73FB2A101J	CHIP R 100 J 1/10W		
R48			RK73FB2A101J	CHIP R 100 J 1/10W	690S	
R49			RK73FB2A105J	CHIP R 1.0M J 1/10W	690S	
R50			RK73FB2A104J	CHIP R 100K J 1/10W	690S	
R51			RK73FB2A473J	CHIP R 47K J 1/10W	690S	
R52			RK73FB2A101J	CHIP R 100 J 1/10W	690S	
R53			RK73FB2A470J	CHIP R 47 J 1/10W		
R54			RK73FB2A392J	CHIP R 3.9K J 1/10W		
R55			RK73FB2A103J	CHIP R 10K J 1/10W		
R56			RK73FB2A471J	CHIP R 470 J 1/10W		
R57			RK73FB2A561J	CHIP R 560 J 1/10W		
R58			RK73FB2A101J	CHIP R 100 J 1/10W		
R59			RK73FB2A472J	CHIP R 4.7K J 1/10W		
R60			RK73FB2A103J	CHIP R 10K J 1/10W		
R61			RK73FB2A220J	CHIP R 22 J 1/10W		
R62			RK73FB2A331J	CHIP R 330 J 1/10W		
R63			RK73FB2A470J	CHIP R 47 J 1/10W		
R64			RK73FB2A561J	CHIP R 560 J 1/10W		
R65			RK73FB2A101J	CHIP R 100 J 1/10W		
R66 ,67			RK73FB2A103J	CHIP R 10K J 1/10W		
R68			RK73FB2A220J	CHIP R 22 J 1/10W		
R69			RK73FB2A471J	CHIP R 470 J 1/10W		
R70			RK73FB2A101J	CHIP R 100 J 1/10W		
R71			RK73FB2A681J	CHIP R 680 J 1/10W		
R72			RK73FB2A470J	CHIP R 47 J 1/10W		
R73 ,74			RK73FB2A472J	CHIP R 4.7K J 1/10W		
R75			RK73FB2A331J	CHIP R 330 J 1/10W		
R76			RK73FB2A102J	CHIP R 1.0K J 1/10W		
R77			RK73FB2A682J	CHIP R 6.8K J 1/10W		
R78			RK73FB2A103J	CHIP R 10K J 1/10W		
R79			RK73FB2A331J	CHIP R 330 J 1/10W		
R80			RK73FB2A223J	CHIP R 22K J 1/10W		
R81			RK73FB2A273J	CHIP R 27K J 1/10W		
R82 ,83			RK73FB2A102J	CHIP R 1.0K J 1/10W		
R84			RK73FB2A334J	CHIP R 330K J 1/10W		
R85			RK73FB2A182J	CHIP R 1.8K J 1/10W		
R86			RK73FB2A102J	CHIP R 1.0K J 1/10W		
R87			RK73FB2A101J	CHIP R 100 J 1/10W		
R88			RK73FB2A682J	CHIP R 6.8K J 1/10W		
R89			RK73FB2A102J	CHIP R 1.0K J 1/10W		
R90			RK73FB2A331J	CHIP R 330 J 1/10W		
R91			RK73FB2A220J	CHIP R 22 J 1/10W		
R92			RK73FB2A223J	CHIP R 22K J 1/10W		
R93			RK73FB2A562J	CHIP R 5.6K J 1/10W		
R94			RK73FB2A682J	CHIP R 6.8K J 1/10W		
R95			RK73FB2A684J	CHIP R 680K J 1/10W		
R96			RK73FB2A182J	CHIP R 1.8K J 1/10W		
R97			RK73FB2A103J	CHIP R 10K J 1/10W		
R98			RK73FB2A104J	CHIP R 100K J 1/10W		
R99 ,100			RK73FB2A472J	CHIP R 4.7K J 1/10W		
R101-104			RK73FB2A221J	CHIP R 220 J 1/10W		
R105			RK73FB2A181J	CHIP R 180 J 1/10W	690S	
R106			RK73FB2A221J	CHIP R 220 J 1/10W		
R107			RK73FB2A472J	CHIP R 4.7K J 1/10W	690S	

L:Scandinavia K:USA P:Canada
Y:PX(Far East, Hawaii) T:England E:Europe
Y:AAFES(Europe) X:Australia M:Other Areas

TS-450S : K,X,P,E,E2,M,M2
TS-690S : K,X,P,E,E2,M

⚠ indicates safety critical components.

PARTS LIST

× New Parts
Parts without Parts No. are not supplied.
Les articles non mentionnes dans le Parts No. ne sont pas fournis.
Teile ohne Parts No. werden nicht geliefert.

PLL UNIT (X50-3150-XX)
CAR UNIT (X50-3160-00)

Ref. No. 参照番号	Address 位置	New Parts 新	Parts No. 部品番号	Description 部品名／規格	Destination 仕向	Remarks 備考
R108,109			RK73FB2A102J	CHIP R 1.0K J 1/10W	690S	
R110			RK73FB2A331J	CHIP R 330 J 1/10W	690S	
R111			RK73FB2A101J	CHIP R 100 J 1/10W	690S	
R112			RK73FB2A331J	CHIP R 330 J 1/10W	690S	
R113			RK73FB2A471J	CHIP R 470 J 1/10W	690S	
R114			RK73FB2A220J	CHIP R 22 J 1/10W		
R115,116			RK73FB2A103J	CHIP R 10K J 1/10W		
R117,118			R92-0679-05	CHIP R 0 OHM	450S	
R119			RK73FB2A101J	CHIP R 100 J 1/10W		
W4 ,5			R92-1061-05	JUMPER REST 0 OHM		
D1			1SV166	DIODE		
D2			RLS135	DIODE		
D3			1SV166	DIODE		
D4			RLS135	DIODE		
D5			1SV166	DIODE		
D6			RLS135	DIODE		
D7			1SV166	DIODE	690S	
D8			RLS135	DIODE	690S	
D9			DAN202K	DIODE		
D10			1SV166	DIODE		
D11 -14			RLS135	DIODE	690S	
IC1 ,2			UPD74HC390G	IC		
IC3			SN16913P	IC(DUBLE BALANCED MIXERS)		
IC4			SN76514N	IC(MIXER)		
IC5 ,6			CXD1225M	IC(PLL SYNTHESIZER)		
IC7		*	TA78L08F	IC		
Q1 ,2			2SC2714(Y)	TRANSISTOR		
Q3 -5			2SC2712(Y)	TRANSISTOR		
Q6 -8			DTC114EK	DIGITAL TRANSISTOR		
Q7			DTC114EK	DIGITAL TRANSISTOR	690S	
Q10 -12			2SK210(GR)	FET		
Q13			2SK210(GR)	FET	690S	
Q14			2SC2714(Y)	TRANSISTOR		
Q15			2SC2996(Y)	TRANSISTOR		
Q16 -18			2SC2714(Y)	TRANSISTOR		
Q19 -21			2SC3324(G)	TRANSISTOR		
Q22			DTC114TK	DIGITAL TRANSISTOR		
Q23			2SC2996(Y)	TRANSISTOR		
Q24 -26			2SC3324(G)	TRANSISTOR		
Q27			DTC114EK	DIGITAL TRANSISTOR	690S	
Q28 -30			DTA143EK	DIGITAL TRANSISTOR		
Q31			2SC2714(Y)	TRANSISTOR		
-			X58-3390-03	SUB UNIT(VCO2)		
CAR UNIT (X50-3160-00)						
C1			CE04EW1A470M	ELECTRO 47UF 10WV		
C2 -4			CK73FB1E103K	CHIP C 0.01UF K		
C5			CE04EW1A470M	ELECTRO 47UF 10WV		
C6			CK73FB1H271K	CHIP C 270PF K		
C7			CC73FCH1H390J	CHIP C 39PF J		
C8 ,9			CK73FB1E103K	CHIP C 0.01UF K		
C10			CK73EB1E104K	CHIP C 0.10UF K		
C11			CK73FB1E103K	CHIP C 0.01UF K		
C12			CE04EW1A470M	ELECTRO 47UF 10WV		
C13			CK73FF1E104Z	CHIP C 0.1UF Z		

L:Scandinavia K:USA P:Canada
Y:PX(Far East, Hawaii) T:England E:Europe
Y:AAFES(Europe) X:Australia M:Other Areas

TS-450S : K,X,P,E,E2,M,M2
TS-690S : K,X,P,E,E2,M

⚠ indicates safety critical components.

PARTS LIST

× New Parts
Parts without Parts No. are not supplied.
Les articles non mentionnes dans le Parts No. ne sont pas fournis.
Teile ohne Parts No. werden nicht geliefert.

CAR UNIT (X50-3160-00)

Ref. No. 参照番号	Address 位置	New Parts 新	Parts No. 部品番号	Description 部品名／規格	Destination 仕向	Remarks 備考
C14			CK73FB1H331K	CHIP C 330PF K		
C15			CK73FB1H471K	CHIP C 470PF K		
C16			CK73FB1H331K	CHIP C 330PF K		
C17			CK73FF1E104Z	CHIP C 0.1UF Z		
C18			CK73FB1E103K	CHIP C 0.01UF K		
C19			CE04EW1A470M	ELECTRO 47UF 10WV		
C20			CK73FB1E103K	CHIP C 0.01UF K		
C21			CE04EW1A470M	ELECTRO 47UF 10WV		
C22 ,23			CK73FB1E103K	CHIP C 0.01UF K		
C24			CE04EW1A470M	ELECTRO 47UF 10WV		
C25			CK73FB1H271K	CHIP C 270PF K		
C28			CK73FF1E104Z	CHIP C 0.1UF Z		
C29			CK73FB1H681K	CHIP C 680PF K		
C30			CK73FB1H122K	CHIP C 1200PF K		
C31			CK73FB1H681K	CHIP C 680PF K		
C32			CK73FB1H102K	CHIP C 1000PF K		
C33			CK73FB1E103K	CHIP C 0.01UF K		
C34			CE04EW1A470M	ELECTRO 47UF 10WV		
C35			CC73FCH1H150J	CHIP C 15PF J		
C36			CC73FCH1H100D	CHIP C 10PF D		
C37 -43			CK73FB1E103K	CHIP C 0.01UF K		
C44			CK73FB1H331K	CHIP C 330PF K		
C45			CC73FCH1H060D	CHIP C 6PF D		
C46			CK73FB1H471K	CHIP C 470PF K		
C47			CC73FCH1H060D	CHIP C 6PF D		
C48			CK73FB1H331K	CHIP C 330PF K		
C49 -50			CK73FB1E103K	CHIP C 0.01UF K		
C51 ,52			CK73FB1H102K	CHIP C 1000PF K		
C53			CC73FRH1H270J	CHIP C 27PF J		
C54			CC73FCH1H0R5C	CHIP C 0.5PF C		
C55			CC73FRH1H270J	CHIP C 27PF J		
C56			CK73FB1H102K	CHIP C 1000PF K		
C57 -60			CK73FB1E103K	CHIP C 0.01UF K		
C61			CK73FB1H102K	CHIP C 1000PF K		
C62			CC73FCH1H220J	CHIP C 22PF J		
C63			CC73FCH1H0R5C	CHIP C 0.5PF C		
C64			CC73FCH1H050C	CHIP C 5PF C		
C65			CC73FCH1H0R5C	CHIP C 0.5PF C		
C66			CC73FCH1H220J	CHIP C 22PF J		
C67 -69			CK73FB1H102K	CHIP C 1000PF K		
C70 ,71			CK73FF1E104Z	CHIP C 0.1UF Z		
C76 -81			CC73FSL1H101J	CHIP C 100PF J		
C82			CK73FB1E103K	CHIP C 0.01UF K		
C83			CC73FUJ1H100D	CHIP C 10PF D		
C84			CK73FB1H471K	CHIP C 470PF K		
C85			CC73FCH1H330J	CHIP C 33PF J		
C86 ,87			CK73FB1E103K	CHIP C 0.01UF K		
C88			CC73FCH1H010C	CHIP C 1PF C		
C89			CC73FCH1H030C	CHIP C 3PF C		
TC1			C05-0030-15	TRIM CAP 20PF		
CN1			E40-3239-05	PIN CONNECTOR		
CN2			E04-0159-05	RF COAXIAL CABLE RECEPTACLE		
CN3			E40-3237-05	PIN CONNECTOR		
CN4			E04-0159-05	RF COAXIAL CABLE RECEPTACLE		
CN5			E40-3239-05	PIN CONNECTOR		

L:Scandinavia K:USA P:Canada
Y:PX(Far East, Hawaii) T:England E:Europe
Y:AAFES(Europe) X:Australia M:Other Areas

TS-450S : K,X,P,E,E2,M,M2
TS-690S : K,X,P,E,E2,M

⚠ indicates safety critical components.

PARTS LIST

× New Parts
Parts without Parts No. are not supplied.
Les articles non mentionnes dans le Parts No. ne sont pas fournis.
Teile ohne Parts No. werden nicht geliefert.

CAR UNIT (X50-3160-00)

Ref. No. 参照番号	Address 位置	New Parts 新	Parts No. 部品番号	Description 部品名／規格	Destination 仕向	Remarks 備考
CN6			E40-3238-05	PIN CONNECTOR		
CN7			E40-5347-05	PIN CONNECTOR		
L1 ,2			L40-4701-17	SMALL FIXED INDUCTOR		
L3 ,4		*	L40-8201-17	SMALL FIXED INDUCTOR		
L5			L40-4701-13	SMALL FIXED INDUCTOR		
L6 ,7			L40-4701-17	SMALL FIXED INDUCTOR		
L8 ,9			L40-2201-17	SMALL FIXED INDUCTOR		
L10			L40-4701-17	SMALL FIXED INDUCTOR		
L11			L40-1592-17	SMALL FIXED INDUCTOR		
L12			L40-6801-17	SMALL FIXED INDUCTOR		
L13			L40-1292-17	SMALL FIXED INDUCTOR		
L14			L40-6801-17	SMALL FIXED INDUCTOR		
L15			L40-1592-17	SMALL FIXED INDUCTOR		
L16 -18			L34-4222-05	COIL		
L19			L34-4003-05	COIL		
L20			L34-4222-05	COIL		
L21			L32-0201-05	OSCILLATING COIL		
X1			L77-1302-05	CRYSTAL RESONATOR(8.375MHZ)		
CP1 -4			R90-0721-05	MULTI-COMP		
R1			RK73FB2A560J	CHIP R 56 J 1/10W		
R2			RK73FB2A101J	CHIP R 100 J 1/10W		
R3			RK73FB2A102J	CHIP R 1.0K J 1/10W		
R4			RK73FB2A184J	CHIP R 180K J 1/10W		
R5			RK73FB2A103J	CHIP R 10K J 1/10W		
R6			RK73FB2A331J	CHIP R 330 J 1/10W		
R7			RK73FB2A470J	CHIP R 47 J 1/10W		
R8			RK73FB2A102J	CHIP R 1.0K J 1/10W		
R9			RK73FB2A681J	CHIP R 680 J 1/10W		
R10			RK73FB2A103J	CHIP R 10K J 1/10W		
R11			RK73FB2A821J	CHIP R 820 J 1/10W		
R12			RK73FB2A470J	CHIP R 47 J 1/10W		
R13			RK73FB2A331J	CHIP R 330 J 1/10W		
R14			RK73FB2A470J	CHIP R 47 J 1/10W		
R15			RK73FB2A223J	CHIP R 22K J 1/10W		
R16 ,17			R92-0670-05	CHIP R 0 OHM		
R21			RK73FB2A470J	CHIP R 47 J 1/10W		
R22 ,23			RK73FB2A103J	CHIP R 10K J 1/10W		
R24			RK73FB2A821J	CHIP R 820 J 1/10W		
R25 ,26			RK73FB2A470J	CHIP R 47 J 1/10W		
R27			RK73FB2A103J	CHIP R 10K J 1/10W		
R28			RK73FB2A682J	CHIP R 6.8K J 1/10W		
R29			RK73FB2A221J	CHIP R 220 J 1/10W		
R30			RK73FB2A470J	CHIP R 47 J 1/10W		
R32			RK73FB2A470J	CHIP R 47 J 1/10W		
R33			RK73FB2A472J	CHIP R 4.7K J 1/10W		
R34			RK73FB2A103J	CHIP R 10K J 1/10W		
R35			RK73FB2A220J	CHIP R 22 J 1/10W		
R36			RK73FB2A471J	CHIP R 470 J 1/10W		
R37 -42			RK73FB2A221J	CHIP R 220 J 1/10W		
R43			RK73FB2A470J	CHIP R 47 J 1/10W		
R44			RK73FB2A333J	CHIP R 33K J 1/10W		
R45			RK73FB2A682J	CHIP R 6.8K J 1/10W		
R46			RK73FB2A102J	CHIP R 1.0K J 1/10W		

L:Scandinavia K:USA P:Canada
Y:PX(Far East, Hawaii) T:England E:Europe
Y:AAFES(Europe) X:Australia M:Other Areas

TS-450S : K,X,P,E,E2,M,M2
TS-690S : K,X,P,E,E2,M

⚠ indicates safety critical components.

PARTS LIST

× New Parts
Parts without Parts No. are not supplied.
Les articles non mentionnes dans le Parts No. ne sont pas fournis.
Teile ohne Parts No. werden nicht geliefert.

CAR UNIT (X50-3160-00)
FILTER UNIT (X51-3110-XX)

Ref. No. 参照番号	Address 位置	New Parts 新	Parts No. 部品番号	Description 部品名／規格	Destination 仕向	Remarks 備考
R47			RK73FB2A470J	CHIP R 47 J 1/10W		
R48			RK73FB2A393J	CHIP R 39K J 1/10W		
R49			RK73FB2A331J	CHIP R 330 J 1/10W		
R50			RK73FB2A150J	CHIP R 15 J 1/10W		
D1			RLS73	DIODE		
IC1 ,2			YM6631	IC(DDS)		
IC3			TC7S04F	IC(2CH NAND GATE)		
IC4 ,5			SN16913P	IC(DUBLE BALANCED MIXERS)		
Q1 -5			2SC2712(Y)	TRANSISTOR		
Q6 ,7			2SC2714(Y)	TRANSISTOR		
Q8 ,9			2SC2712(Y)	TRANSISTOR		
FILTER UNIT (X51-3110-XX)	-00 : TS-690S (K,X,P,E,E2) -01 : TS-450S (K,X,P,E,E2) -21 : TS-690S (M) -22 : TS-450S (M,M2)					
C1 -3			CK73FB1H103K	CHIP C 0.010UF K		
C4			CK73FB1H103K	CHIP C 0.010UF K	MM2	
C5 -7			CK73FB1H103K	CHIP C 0.010UF K		
C8			CK73FB1H103K	CHIP C 0.010UF K	690S	
C9			CC45CH2H030C	CERAMIC 3PF C		
C10			CK45F1H103Z	CERAMIC 0.010UF Z		
C11			CC73FSL1H101J	CHIP C 100PF J		
C12			CC73FSL1H560J	CHIP C 56PF J		
C13			CK45F1H103Z	CERAMIC 0.010UF Z		
C14			CK73FB1H103K	CHIP C 0.010UF K		
C15			CK73FB1H103K	CHIP C 0.010UF K	690S	
C16 -18			CK73FB1H103K	CHIP C 0.010UF K		
C19			CE04EW1E470M	ELECTRO 47UF 25WV		
C20 -24			CK73FB1H103K	CHIP C 0.010UF K		
C25			CE04EW1E470M	ELECTRO 47UF 25WV		
C26 -30			CK73FB1H103K	CHIP C 0.010UF K		
C31 -33			CK73FB1H103K	CHIP C 0.010UF K		
C34			CC45SL2H390J	CERAMIC 39PF J		
C35			CK73FB1H103K	CHIP C 0.010UF K		
C101			CM93D2H102J	MICA 1000PF J		
C102			CC45SL2H271J	CERAMIC 270PF J		
C103			CC45SL2H331J	CERAMIC 330PF J		
C104,105			CM93D2H102J	MICA 1000PF J		
C106			CC45SL2H181J	CERAMIC 180PF J		
C107			CM93D2H222J	MICA 2200PF J		
C108,109			CC45SL2H181J	CERAMIC 180PF J		
C110			CM93D2H102J	MICA 1000PF J		
C111			CM93D2H561J	MICA 560PF J		
C112-115			CC45SL2H431J	CERAMIC 430PF J		
C116			CC45SL2H271J	CERAMIC 270PF J		
C117,118			CC45SL2H431J	CERAMIC 430PF J		
C119			CC45SL2H181J	CERAMIC 180PF J		
C120			CC45SL2H331J	CERAMIC 330PF J		
C121			CC45SL2H820J	CERAMIC 82PF J		
C122			CC45SL2H221J	CERAMIC 220PF J		
C123			CC45SL2H270J	CERAMIC 27PF J		
C124			CC45SL2H121J	CERAMIC 120PF J		
C125			CC45SL2H151J	CERAMIC 150PF J		
C126			CC45SL2H471J	CERAMIC 470PF J		
C127			CC45SL2H470J	CERAMIC 47PF J		
C128			CC45SL2H331J	CERAMIC 330PF J		
C129,130			CC45SL2H101J	CERAMIC 100PF J	MM2	

L:Scandinavia K:USA P:Canada
Y:PX(Far East, Hawaii) T:England E:Europe
Y:AAFES(Europe) X:Australia M:Other Areas

TS-450S : K,X,P,E,E2,M,M2
TS-690S : K,X,P,E,E2,M

⚠ indicates safety critical components.

PARTS LIST

* New Parts
Parts without Parts No. are not supplied.
Les articles non mentionnes dans le Parts No. ne sont pas fournis.
Teile ohne Parts No. werden nicht geliefert.

FILTER UNIT (X51-3110-XX)

Ref. No. 参照番号	Address 位置	New Parts 新	Parts No. 部品番号	Description 部品名／規格	Destination 仕向	Remarks 備考
C132			CC45SL2H471J	CERAMIC 470PF J	MM2	
C133			CC45SL2H560J	CERAMIC 56PF J	MM2	
C134			CC45SL2H221J	CERAMIC 220PF J	MM2	
C135,136			CC45SL2H121J	CERAMIC 120PF J		
C137			CC45SL2H271J	CERAMIC 270PF J		
C138			CC45SL2H470J	CERAMIC 47PF J		
C139			CC45SL2H151J	CERAMIC 150PF J		
C140			CC45SL2H560J	CERAMIC 56PF J		
C141			CC45SL2H680J	CERAMIC 68PF J		
C142			CC45SL2H181J	CERAMIC 180PF J		
C143			CC45SL2H470J	CERAMIC 47PF J		
C144			CC45SL2H101J	CERAMIC 100PF J		
C145			CC45SL2H180J	CERAMIC 18PF J		
C146		*	CC45SL2H430J	CERAMIC 43PF J		
C147			CC45SL2H151J	CERAMIC 150PF J		
C148			CC45SL2H120J	CERAMIC 12PF J		
C149		*	CC45SL2H510J	CERAMIC 51PF J		
C150			CC45SL2H100D	CERAMIC 10PF D	690S	
C153			CC45SL2H390J	CERAMIC 39PF J	690S	
C154			CC45SL2H180J	CERAMIC 18PF J	690S	
C156			CC45SL2H560J	CERAMIC 56PF J	690S	
C158			CC45SL2H120J	CERAMIC 12PF J	690S	
C159,160		*	CC45SL2H510J	CERAMIC 51PF J		
TC1			C05-0030-15	TRIM CAP 20PF		
CN1			E04-0159-05	RF COAXIAL CABLE RECEPTACLE		
CN2			E04-0159-05	RF COAXIAL CABLE RECEPTACLE	690S	
CN3 ,4			E04-0159-05	RF COAXIAL CABLE RECEPTACLE		
CN5			E40-3237-05	PIN CONNECTOR (2P)		
CN6			E40-3242-05	PIN CONNECTOR (7P)		
CN7			E40-3237-05	PIN CONNECTOR (2P)		
CN8			E40-3239-05	PIN CONNECTOR (4P)		
CN9			E40-3242-05	PIN CONNECTOR (7P)		
F1		*	F06-4029-05	FUSE 4A		
A1 ,2		*	J13-0075-05	FUSE HOLDER		
L1 ,2			L40-1021-14	SMALL FIXED INDUCTOR		
L3 -5			L40-1011-14	SMALL FIXED INDUCTOR		
L6			L40-1011-14	SMALL FIXED INDUCTOR	MM2	
L7 -9			L40-1011-14	SMALL FIXED INDUCTOR		
L10			L40-1011-14	SMALL FIXED INDUCTOR	690S	
L11			L40-1011-14	SMALL FIXED INDUCTOR	690S	
L12			L40-1011-14	SMALL FIXED INDUCTOR		
L101		*	L39-1202-05	COIL (3.3UH)		
L102,103		*	L39-1203-05	COIL (4.4UH)		
L104		*	L39-1204-05	COIL (1.24UH)		
L105		*	L39-1205-05	COIL (1.54UH)		
L106		*	L39-1206-05	COIL (1.74UH)		
L107		*	L39-1207-05	COIL. (0.96UH)		
L108		*	L39-1204-05	COIL (1.24UH)		
L109		*	L39-1208-05	COIL (0.68UH)	MM2	
L110		*	L39-1207-05	COIL (0.96UH)	MM2	
L111			L34-1278-05	COIL (8.5T)		
L112			L34-1277-05	COIL (9.5T)		
L113			L34-1281-05	COIL (5.5T)		

L:Scandinavia K:USA P:Canada
Y:PX(Far East, Hawaii) T:England E:Europe
Y:AAFES(Europe) X:Australia M:Other Areas

TS-450S : K,X,P,E,E2,M,M2
TS-690S : K,X,P,E,E2,M

⚠ indicates safety critical components.

PARTS LIST

* New Parts
Parts without Parts No. are not supplied.
Les articles non mentionnes dans le Parts No. ne sont pas fournis.
Teile ohne Parts No. werden nicht geliefert.

FILTER UNIT (X51-3110-XX)

Ref. No. 参照番号	Address 位置	New Parts 新	Parts No. 部品番号	Description 部品名／規格	Destination 仕向	Remarks 備考
L114			L34-1280-05	COIL (6.5T)		
L115			L34-1282-05	COIL (4.5T)		
L116			L34-1281-05	COIL (5.5T)		
L117-119		*	L34-1359-05	COIL (3.5T)	690S	
L120		*	L34-1360-05	COIL (4.5T)		
L121			L39-0480-05	TOROIDAL COIL (DETECTOR)		
T101-108			L92-0107-05	TOLOIDAL CORE		
T109			L92-0108-05	TOLOIDAL CORE	MM2	
T110			L92-0107-05	TOLOIDAL CORE	MM2	
CP1			R90-0227-05	MULTI-COMP 4.7KX6 J 1/6W		
R1			RK73FB2A100J	CHIP R 10 J 1/10W		
R2 -5			RK73FB2A330J	CHIP R 33 2 A		
R6 -9			RK73FB2A270J	CHIP R 27 J 1/10W		
R16 -18			RK73FB2A472J	CHIP R 4.7K J 1/10W		
R19			RK73FB2A271J	CHIP R 270 J 1/10W		
R20 -23			RK73FB2A472J	CHIP R 4.7K J 1/10W		
R24 ,25			RK73FB2A104J	CHIP R 100K J 1/10W		
R26 ,27			RK73FB2A104J	CHIP R 100K J 1/10W	690S	
R100			R92-0670-05	CHIP R 0 OHM		
R101			R92-0679-05	CHIP R 0 OHM	MM2	
R102			R92-0670-05	CHIP R 0 OHM	KXPE	
VR1		*	R12-6730-05	TRIMMING POT. (220)		
K1 -3			S51-1420-05	RELAY		
K4			S51-1420-05	RELAY	MM2	
K5 -10			S51-1420-05	RELAY		
K11			S51-1420-05	RELAY	MM2	
K12 -14			S51-1420-05	RELAY		
K15			S51-1429-05	RELAY		
K16 ,17			S51-1420-05	RELAY (50F)	690S	
S1			S31-2416-05	SWITCH (ANT HF/50M)	690S	
D1 -3			LFB01	DIODE		
D4			LFB01	DIODE	MM2	
D5 -7			LFB01	DIODE		
D8			LFB01	DIODE	690S	
D9 ,10			1SS101	DIODE		
D11			DSA301LA	DIODE		
D12			DSA301LA	DIODE	690S	
D13			LFB01	DIODE		
D14			LFB01	DIODE	690S	
D15			RLZJ5.1B	DIODE		
D16			DAP202(K)	DIODE		
D17 ,18			RLS73	DIODE	KXPE	
IC1			SN74LS145N	IC(BCD TO DECIMAL DECODER/DRIV		
IC2			M54581P	IC(TRANSISTOR ARRAY)		
Q1 ,2			DTB143EK	DIGITAL TRANSISTOR		
W1			R92-1061-05	JUMPER REST 0 OHM		
W2			R92-1061-05	JUMPER REST 0 OHM	690S	
W3 ,4		*	E33-1948-05	FINISHED WIRE SET(1P,4P AT300		
W5			R92-1061-05	JUMPER REST 0 OHM		
W7			R92-1061-05	JUMPER REST 0 OHM		
W8			R92-1061-05	JUMPER REST 0 OHM	690S	
W33			E31-1449-05	CONNECTING WIRE		

L:Scandinavia K:USA P:Canada
Y:PX(Far East, Hawaii) T:England E:Europe
Y:AAFES(Europe) X:Australia M:Other Areas

TS-450S : K,X,P,E,E2,M,M2
TS-690S : K,X,P,E,E2,M

⚠ indicates safety critical components.

PARTS LIST

* New Parts
Parts without Parts No. are not supplied.
Les articles non mentionnes dans le Parts No. ne sont pas fournis.
Teile ohne Parts No. werden nicht geliefert.

AT UNIT (X53-3370-00)

Ref. No. 参照番号	Address 位置	New Parts 新	Parts No. 部品番号	Description 部品名／規格	Destination 仕向	Remarks 備考
AT UNIT/AT-450 (X53-3370-00)						
C1			CM93D2H560J	MICA 56PF J		
C2 -8			CK73FB1E103K	CHIP C 0.01UF K		
C9 ,10			CK73FB1H102K	CHIP C 1000PF K		
C11			CK73FB1E103K	CHIP C 0.01UF K		
C12			CE04EW1A470M	ELECTRO 47UF 10WV		
C13 -19			CK73FB1E103K	CHIP C 0.01UF K		
C20			CE04EW1E101M	ELECTRO 100UF 25WV		
C21 -33			CK73FB1E103K	CHIP C 0.01UF K		
C34			CK73FB1H103K	CHIP C 0.010UF K		
C35			CK73FB1E103K	CHIP C 0.01UF K		
C101-106			CK73FB1H103K	CHIP C 0.010UF K		
TC1			C05-0031-15	TRIM CAP 10PF		
VC101,102		*	C02-0024-05	VARIABLE CAPACITOR		
A5		*	D40-0638-05	GEAR ASSY		
-			E37-0192-05	FLAT CABLE		
CN1 ,2			E04-0157-05	RF COAXIAL CABLE RECEPTACLE		
CN3			E40-5349-05	FLAT CABLE (16P)		
CN4			E40-3243-05	PIN CONNECTOR (8P)		
A1		*	F10-1498-02	SHIELDING PLATE		
A2		*	F10-1499-04	SHIELDING PLATE		
A3		*	F10-1500-03	SHIELDING PLATE		
A4		*	F10-2001-03	SHIELDING PLATE		
-			G02-0717-04	SPRING		
L1			L39-0496-05	COIL		
L2		*	L39-0415-25	COIL		
L3 -8			L40-1011-13	SMALL FIXED INDUCTOR		
L9 -11			L40-1011-17	SMALL FIXED INDUCTOR		
L12 -15			L40-1011-14	SMALL FIXED INDUCTOR		
L101-106			L40-1011-14	SMALL FIXED INDUCTOR		
L107		*	L34-1365-05	COIL		
L108			L34-3145-15	AT COIL B		
L109			L34-3144-15	AT COIL A		
T101,102			L92-0119-05	TOLOIDAL CORE		
-			N87-3006-46	BRAZIER HEAD TAPTITE SCREW		
-			N88-3006-46	FLAT HEAD TAPTITE SCREW		
R1 ,2			RD14CB2E101J	RD 100 J 1/4W		
R3			RK73FB2A102J	CHIP R 1.0K J 1/10W		
R4			RD14CB2E470J	RD 47 J 1/4W		
R5 ,6			RK73FB2A181J	CHIP R 180 J 1/10W		
R7 -10			RK73FB2A103J	CHIP R 10K J 1/10W		
R11			RK73FB2A563J	CHIP R 56K J 1/10W		
R12			RK73FB2A121J	CHIP R 120 J 1/10W		
R13			RK73FB2A101J	CHIP R 100 J 1/10W		
R14			RK73FB2A563J	CHIP R 56K J 1/10W		
R15			RK73FB2A121J	CHIP R 120 J 1/10W		
R16			RK73FB2A101J	CHIP R 100 J 1/10W		
R17			RK73FB2A330J	CHIP R 33 J 1/10W		
R18			RK73FB2A103J	CHIP R 10K J 1/10W		
R19			RK73FB2A330J	CHIP R 33 J 1/10W		
R20 -23			RK73FB2A103J	CHIP R 10K J 1/10W		

L:Scandinavia K:USA P:Canada
Y:PX(Far East, Hawaii) T:England E:Europe
Y:AAFES(Europe) X:Australia M:Other Areas

TS-450S : K,X,P,E,E2,M,M2
TS-690S : K,X,P,E,E2,M

⚠ indicates safety critical components.

PARTS LIST

* New Parts
Parts without Parts No. are not supplied.
Les articles non mentionnes dans le Parts No. ne sont pas fournis.
Teile ohne Parts No. werden nicht geliefert.

AT UNIT (X53-3370-00)
VCO2 (X58-3390-03)

Ref. No. 参照番号	Address 位置	New Parts 新	Parts No. 部品番号	Description 部品名／規格	Destination 仕向	Remarks 備考
R24 ,25			RD14BB2E100J	RD 10 J 1/4W		
R26			RK73FB2A472J	CHIP R 4.7K J 1/10W		
R27 -32			RK73FB2A103J	CHIP R 10K J 1/10W		
R33			RK73FB2A472J	CHIP R 4.7K J 1/10W		
R34 -42			R92-0670-05	CHIP R 0 OHM		
VR101,102			R01-3435-05	TRIM POT. 10K		
K1			S51-2417-05	RELAY		
K101-106			S76-0401-05	RELAY		
M1 ,2			T42-0453-05	MOTOR		
D1 ,2			1N60	DIODE		
D3 -8			1SS226	DIODE		
D9			LFB01	DIODE		
D101-106			LFB01	DIODE		
IC1		*	SN74S74NS	IC		
IC2 ,3			TC4066BF	IC(BILATERAL SWITCH X4)		
IC4 ,5			BA6109U2	IC(MOTOR DRIVER)		
IC6			NJM2903M	IC(COMPARATOR X2)		
Q1 ,2			2SC2714(Y)	TRANSISTOR		
Q3			DTC114EK	DIGITAL TRANSISTOR		
Q4			2SA1204(Y)	TRANSISTOR		
Q5			DTC114EK	DIGITAL TRANSISTOR		
Q6			DTD143EK	DIGITAL TRANSISTOR		
W1		*	E37-0191-05	CONNECTING WIRE		
W2			E31-6038-05	CONNECTING WIRE		
W5 -19			001-0005-05	COATING WIRE		
W101			E31-6038-05	CONNECTING WIRE		
W102			E31-6083-05	CONNECTING WIRE		
W103-106		*	E33-1949-05	FINISHED WIRE SET		
VCO2 (X58-3390-03)						
-			B42-2437-04	LABEL		
C1			CK73FB1H102K	CHIP C 1000PF K		
C2			CC73FSL1H101J	CHIP C 100PF J		
C3			CC73FCH1H070D	CHIP C 7PF D		
C4			CC73FCH1H220J	CHIP C 22PF J		
C5			CC73FCH1H070D	CHIP C 7PF D		
C6			CC73FCH1H180J	CHIP C 18PF J		
C7			CC73FCH1H120J	CHIP C 12PF J		
C8 ,9			CK73FB1H102K	CHIP C 1000PF K		
C10			CC73FCH1H010CMU	CHIP C 1.0PF C		
C11			CK73FB1H102K	CHIP C 1000PF K		
TC1			C05-0331-05	TRIMMING CAP		
TP1 -3			E23-0603-05	TERMINAL		
-			G13-0904-04	CUCHION		
L1			L33-0690-05	CHOKE COIL 3.3UH		
L2			L34-2353-05	COIL		
-			N30-2604-41	PAN HEAD MACHINE SCREW		
R1			RK73FB2A682J	CHIP R 6.8K J 1/10W		
R2			RK73FB2A271J	CHIP R 270 J 1/10W		

L:Scandinavia K:USA P:Canada
Y:PX(Far East, Hawaii) T:England E:Europe
Y:AAFES(Europe) X:Australia M:Other Areas

TS-450S : K,X,P,E,E2,M,M2
TS-690S : K,X,P,E,E2,M

⚠ indicates safety critical components.

PARTS LIST

× New Parts
Parts without Parts No. are not supplied.
Les articles non mentionnes dans le Parts No. ne sont pas fournis.
Teile ohne Parts No. werden nicht geliefert.

VCO2 (X58-3390-03)
SIDE TONE (X59-1060-00)
VOX (X59-1080-00)
FM MIC (X59-3000-03)
NOTCH (X59-3030-00)

Ref. No. 参照番号	Address 位置	New Parts 新	Parts No. 部品番号	Description 部品名／規格	Destination 仕向	Remarks 備考
R3			RK73FB2A331J	CHIP R 330 J 1/10W		
R4 ,5			RK73FB2A472J	CHIP R 4.7K J 1/10W		
R6			RK73FB2A471J	CHIP R 470 J 1/10W		
R7			RK73FB2A560J	CHIP R 56 J 1/10W		
D1			1SV164	DIODE		
Q1			2SK508NV(K52)	FET		
Q2			2SC2714(Y)	TRANSISTOR		
SIDE TONE (X59-1060-00)						
C2			CK73FB1E473K	CHIP C 0.047UF K		
C3 -6			CK73FB1H123K	CHIP C 0.012UF K		
C7 ,8			CK73FB1E473K	CHIP C 0.047UF K		
R1 ,2			RK73FB2A823J	CHIP R 82K J 1/10W		
R3			RK73FB2A223J	CHIP R 22K J 1/10W		
R4			RK73FB2A472J	CHIP R 4.7K J 1/10W		
R5			RK73FB2A102J	CHIP R 1.0K J 1/10W		
R6			RK73FB2A103J	CHIP R 10K J 1/10W		
R7 ,8			RK73FB2A333J	CHIP R 33K J 1/10W		
R9			RK73FB2A103J	CHIP R 10K J 1/10W		
R10			RK73FB2A333J	CHIP R 33K J 1/10W		
R11			RK73FB2A183J	CHIP R 18K J 1/10W		
W1 -6			R92-0670-05	CHIP R 0 OHM		
D1			DAN202(K)	DIODE		
D2			DAP202(K)	DIODE		
D3			DAN202(K)	DIODE		
Q1			2SC2712(Y)	TRANSISTOR		
VOX (X59-1080-00)						
C1			CK73FB1H102K	CHIP C 1000PF K		
C2			CK73FB1E223K	CHIP C 0.022UF K		
R1			RK73FB2A104J	CHIP R 100K J 1/10W		
R2			RK73FB2A103J	CHIP R 10K J 1/10W		
R3			RK73FB2A472J	CHIP R 4.7K J 1/10W		
R4 ,5			RK73FB2A103J	CHIP R 10K J 1/10W		
R6 ,7			RK73FB2A105J	CHIP R 1.0M J 1/10W		
R8			RK73FB2A104J	CHIP R 100K J 1/10W		
R9			RK73FB2A105J	CHIP R 1.0M J 1/10W		
R10			RK73FB2A103J	CHIP R 10K J 1/10W		
W1 -3			R92-0670-05	CHIP R 0 OHM		
D1 -2			DAP202(K)	DIODE		
IC1			NJM2904M	IC(OP AMP X2))		
IC2			TC4001BF	IC(NOR X6)		
Q1			2SC2712(Y)	TRANSISTOR		
FM MIC (X59-3000-03)						
C1			CC73FCH1H680J	CHIP C 68PF J		
C2			CK73FB1H561K	CHIP C 560PF K		
C3			CC73FCH1H390J	CHIP C 39PF J		
C4			CK73FB1H102K	CHIP C 1000PF K		
JR1			R92-0670-05	CHIP R 0 OHM		
R1 -9			RK73FB2AXXXJ	CHIP R		
IC1			NJM4558M	IC(OP AMP X2))		
Q1			2SC2712(Y)	TRANSISTOR		
NOTCH (X59-3030-00)						
C1 ,2			CK73FB1H682K	CHIP C 6800PF K		

L:Scandinavia K:USA P:Canada
Y:PX(Far East, Hawaii) T:England E:Europe
Y:AAFES(Europe) X:Australia M:Other Areas

TS-450S : K,X,P,E,E2,M,M2
TS-690S : K,X,P,E,E2,M

⚠ indicates safety critical components.

PARTS LIST

⋇ New Parts
Parts without Parts No. are not supplied.
Les articles non mentionnes dans le Parts No. ne sont pas fournis.
Teile ohne Parts No. werden nicht geliefert.

NOTCH (X59-3030-00)
NB (X59-3350-00)
FAN (X59-3370-00)
TRX (X59-3680-01)

Ref. No. 参照番号	Address 位置	New Parts 新	Parts No. 部品番号	Description 部品名／規格	Destination 仕向	Remarks 備考
C3			CK73FB1H271K	CHIP C 270PF K		
R1 -4			RK73FB2A913J	CHIP R 91K J 1/10W		
R5			RK73FB2A681J	CHIP R 680 J 1/10W		
R6			RK73FB2A913J	CHIP R 91K J 1/10W		
R7			RK73FB2A471J	CHIP R 470 J 1/10W		
R8			RK73FB2A913J	CHIP R 91K J 1/10W		
R9			RK73FB2A102J	CHIP R 1.0K J 1/10W		
R10 ,11			RK73FB2A913J	CHIP R 91K J 1/10W		
R12			RK73FB2A102J	CHIP R 1.0K J 1/10W		
R13			RK73FB2A684J	CHIP R 680K J 1/10W		
W1			R92-0670-05	CHIP R 0 ΩHM		
IC1			NJM4558M	IC(ΩP AMP X2))		
NB (X59-3350-00)						
C1			CK73FB1H103K	CHIP C 0.010UF K		
C2			CK73FB1H102K	CHIP C 1000PF K		
C3			CK73EF1E474Z	CHIP C 0.47UF Z		
R1			RK73FB2A103J	CHIP R 10K J 1/10W		
R2			RK73FB2A563J	CHIP R 56K J 1/10W		
R3			RK73FB2A684J	CHIP R 680K J 1/10W		
R4			RK73FB2A103J	CHIP R 10K J 1/10W		
R5			RK73FB2A184J	CHIP R 180K J 1/10W		
W1 -3			R92-0670-05	CHIP R 0 ΩHM		
IC1			TC4011BF	IC(NAND X4)		
Q1 ,2			DTC114EK	DIGITAL TRANSISTΩR		
FAN (X59-3370-00)						
C1			CK73FB1H103K	CHIP C 0.010UF K		
R1			RK73FB2A103J	CHIP R 10K J 1/10W		
R2			RK73FB2A223J	CHIP R 22K J 1/10W		
R3			RK73FB2A562J	CHIP R 5.6K J 1/10W		
R4			RK73FB2A681J	CHIP R 680 J 1/10W		
R5			RK73FB2A562J	CHIP R 5.6K J 1/10W		
R6			RK73FB2A332J	CHIP R 3.3K J 1/10W		
R7			RK73FB2A562J	CHIP R 5.6K J 1/10W		
R8			RK73FB2A223J	CHIP R 22K J 1/10W		
R9			RK73FB2A472J	CHIP R 4.7K J 1/10W		
R10			RK73FB2A103J	CHIP R 10K J 1/10W		
W1 ,2			R92-0670-05	CHIP R 0 ΩHM		
IC1			NJM2904M	IC(ΩP AMP X2))		
Q1			2SC2712(Y)	TRANSISTΩR		
TRX (X59-3680-01)						
R151			RK73FB2A471J	CHIP R 470 J 1/10W		
R152			RK73FB2A103J	CHIP R 10K J 1/10W		
R153			RK73FB2A473J	CHIP R 47K J 1/10W		
R154			RK73FB2A103J	CHIP R 10K J 1/10W		
R155			RK73FB2A471J	CHIP R 470 J 1/10W		
R156			RK73FB2A103J	CHIP R 10K J 1/10W		
Q151,152			2SA1213(Y)	TRANSISTΩR		
Q153-155			DTC114TK	DIGITAL TRANSISTΩR		

L:Scandinavia K:USA P:Canada
Y:PX(Far East, Hawaii) T:England E:Europe
Y:AAFES(Europe) X:Australia M:Other Areas

TS-450S : K,X,P,E,E2,M,M2
TS-690S : K,X,P,E,E2,M

⚠ indicates safety critical components.

PARTS LIST

× New Parts
Parts without Parts No. are not supplied.
Les articles non mentionnes dans le Parts No. ne sont pas fournis.
Telle ohne Parts No. werden nicht gellefert.

DELAY (X59-3860-00)
SELECT (X59-3920-00)
BK-IN (X59-3930-00)
METER (X59-3940-00)

Ref. No. 参照番号	Address 位置	New Parts 新	Parts No. 部品番号	Description 部品名／規格	Destination 仕向	Remarks 備考
DELAY (X59-3860-00)						
C1			CK73FF1E104Z	CHIP C 0.1UF Z		
R1			RK73FB2A472J	CHIP R 4.7K J 1/10W		
R2			RK73FB2A103J	CHIP R 10K J 1/10W		
R3			RK73FB2A101J	CHIP R 100 J 1/10W		
D1 ,2			RLS73	DIODE		
D3			DAN202K	DIODE		
IC1			TC4538BF	IC(ONE SHOT MULT)		
SELECT (X59-3920-00)						
C1 -3			CK73FF1C105Z	CHIP C 1.0UF Z		
R1 ,2			RK73FB2A104J	CHIP R 100K J 1/10W		
R3			RK73FB2A562J	CHIP R 5.6K J 1/10W		
IC1			TC4053BF	IC(3-INPUT 2CH MPX/DE-MPX)		
BK-IN (X59-3930-00)						
C1			CK73FB1E393K	CHIP C 0.039UF K		
C2		*	CK73FB1E683K	CHIP C 0.068UF K		
C3			CK73FB1E683K	CHIP C 0.068UF K		
R1			RK73FB2A154J	CHIP R 150K J 1/10W		
R2			RK73FB2A103J	CHIP R 10K J 1/10W		
R3			RK73FB2A474J	CHIP R 470K J 1/10W		
R4			RK73FB2A103J	CHIP R 10K J 1/10W		
R5 -7			R92-0670-05	CHIP R 0 OHM		
D1 ,2			RLS73	DIODE		
D3			DAN202(K)	DIODE		
IC1			TC4069UBF	IC(INVERTER X6)		
IC2 ,3			TC4S11F	IC(2 INPUT NAND GATE)		
Q1			DTC124EK	DIGITAL TRANSISTOR		
METER (X59-3940-00)						
C1 ,2			CK73FF1E104Z	CHIP C 0.1UF Z		
R1			RK73FB2A103J	CHIP R 10K J 1/10W		
R2			RK73FB2A684J	CHIP R 680K J 1/10W		
R3			RK73FB2A224J	CHIP R 220K J 1/10W		
R4 ,5			RK73FB2A104J	CHIP R 100K J 1/10W		
R6			RK73FB2A102J	CHIP R 1.0K J 1/10W		
R7			RK73FB2A103J	CHIP R 10K J 1/10W		
R8			RK73FB2A224J	CHIP R 220K J 1/10W		
R9			RK73FB2A684J	CHIP R 680K J 1/10W		
R10			RK73FB2A104J	CHIP R 100K J 1/10W		
R11			RK73FB2A224J	CHIP R 220K J 1/10W		
R12			RK73FB2A102J	CHIP R 1.0K J 1/10W		
R13 ,14			R92-0670-05	CHIP R 0 OHM		
D1 ,2			HSM88AS	DIODE		
IC1			NJM2904M	IC(OP AMP X2)		

L:Scandinavia K:USA P:Canada
Y:PX(Far East, Hawaii) T:England E:Europe
Y:AAFES(Europe) X:Australia M:Other Areas

TS-450S : K,X,P,E,E2,M,M2
TS-690S : K,X,P,E,E2,M

⚠ indicates safety critical components.

EXPLODED VIEW

I	M3 x 6 (OC)	: N33-3006-41
N	M3 x 6 (Br-Tap)	: N87-3006-46
O	M3 x 8 (Br-Tap)	: N87-3008-46
Q	M3 x 6 (Bi-Tap)Blk	: N89-3006-45
R	M3 x 8 (TP)	: N90-3008-46

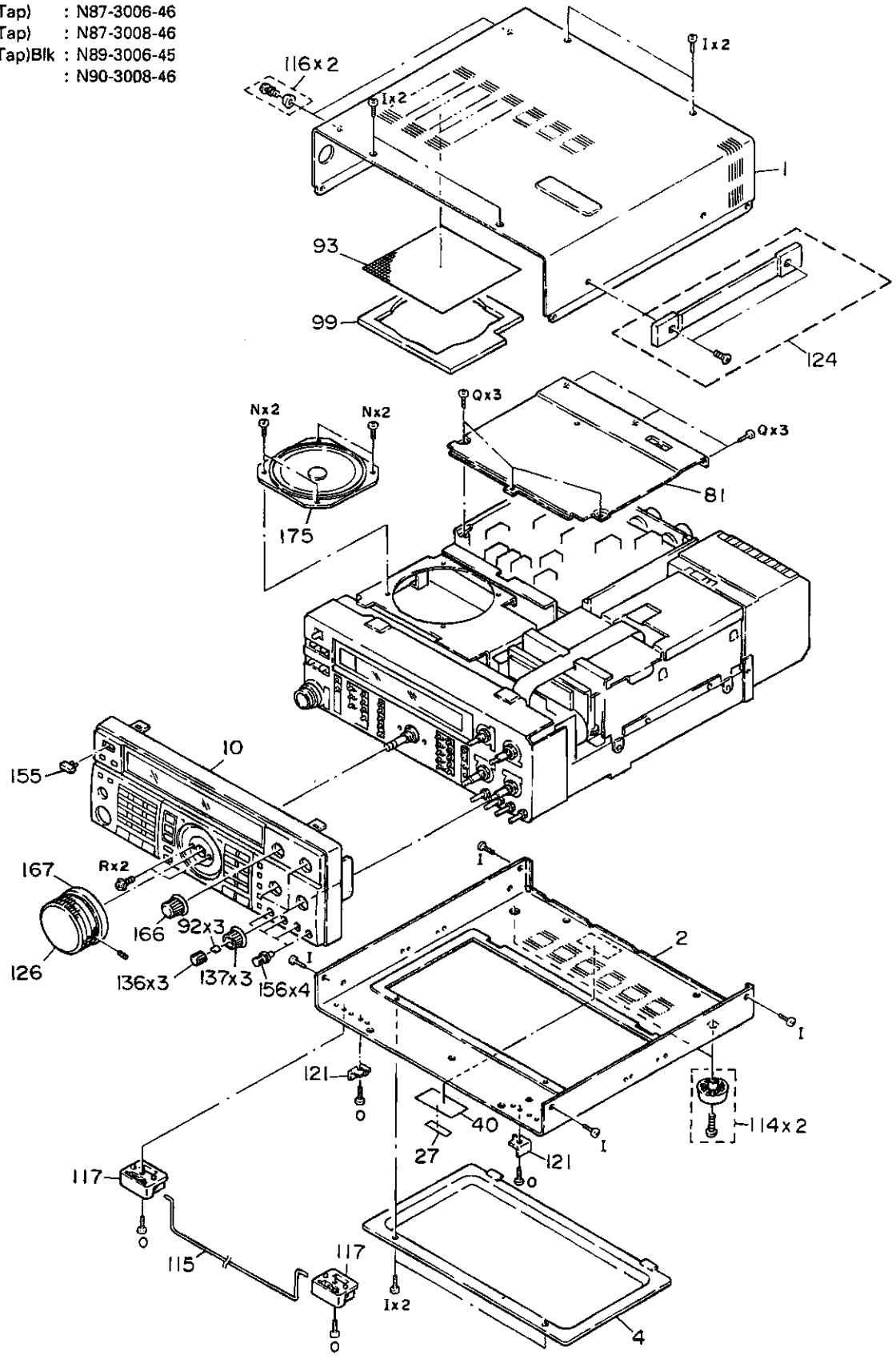

EXPLODED VIEW

C D

G M3 x 5 (F) : N32-3005-46
O M3 x 8 (Br-Tap) : N87-3008-46

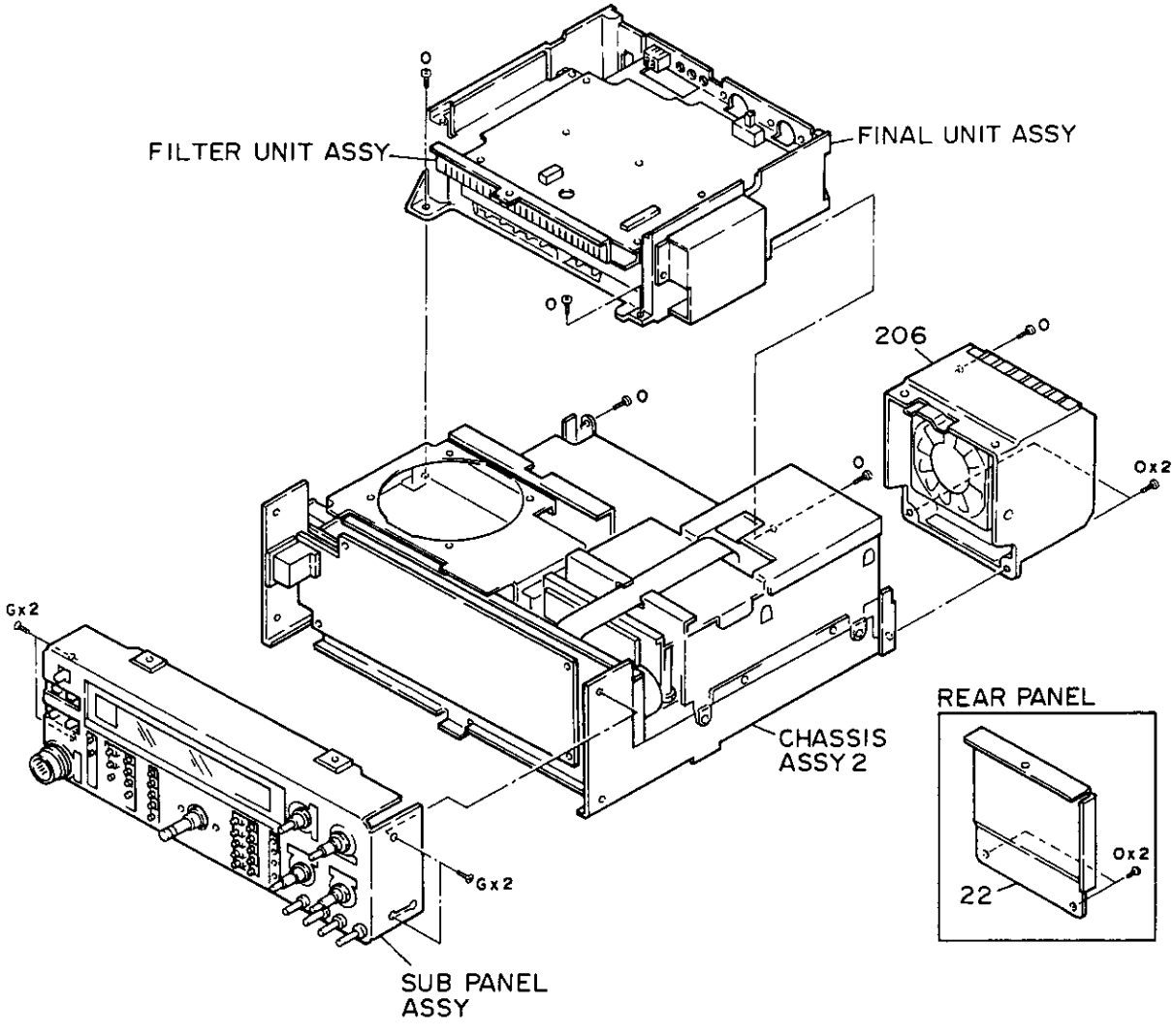

TS-450S/690S

EXPLODED VIEW

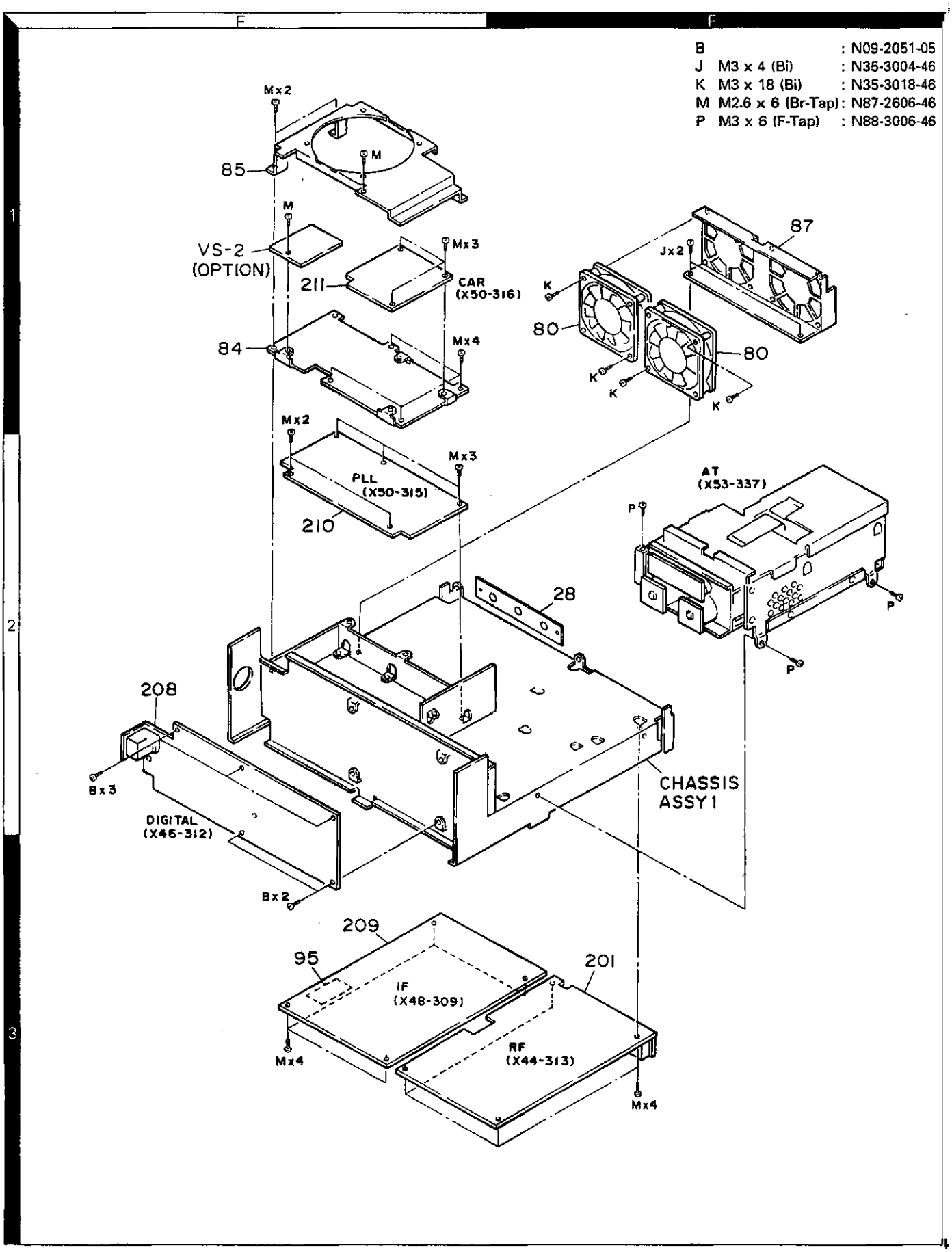

EXPLODED VIEW

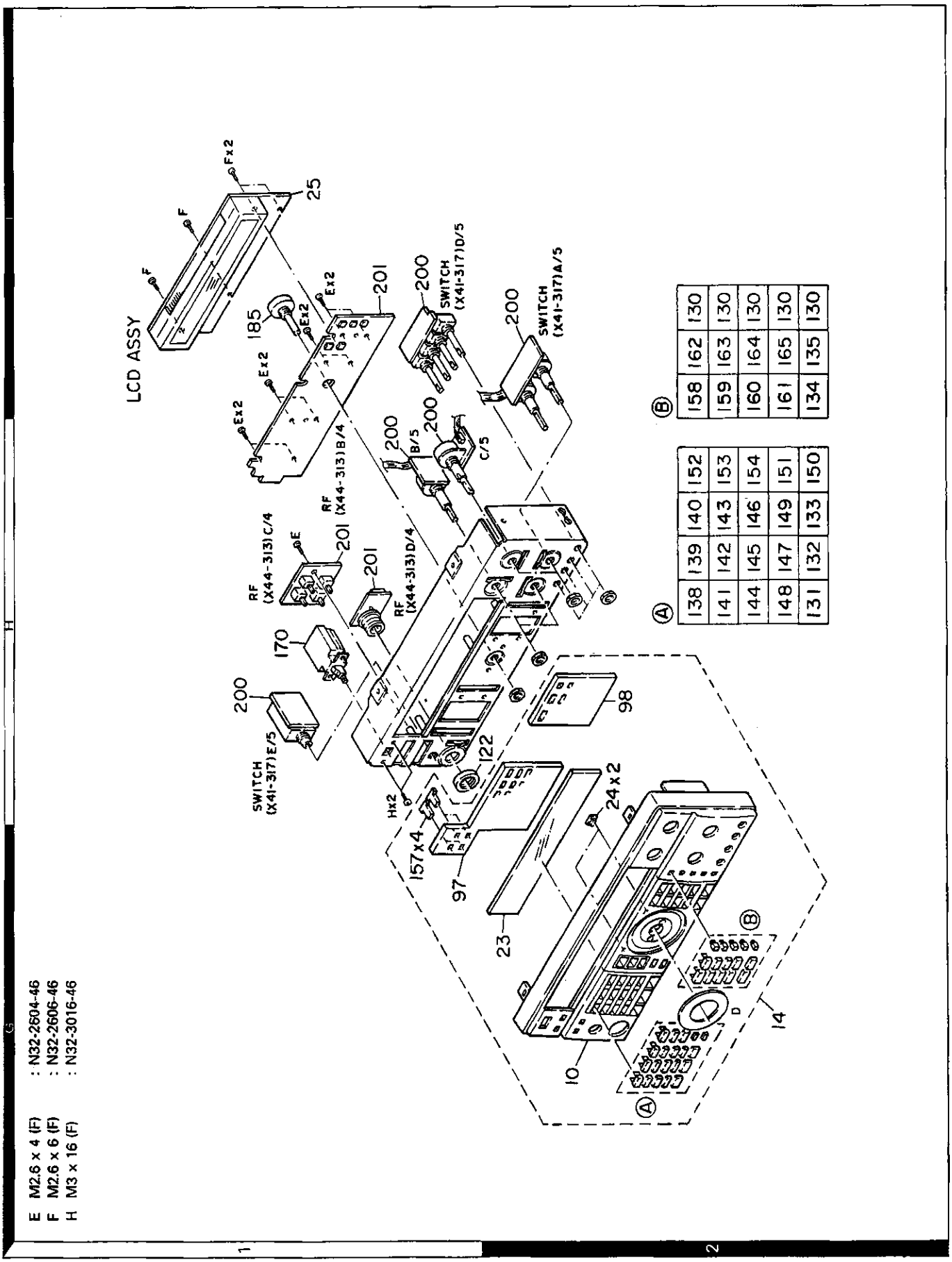

Ⓐ				
138	139	140	152	
141	142	143	153	
144	145	146	154	
148	147	149	151	
131	132	133	150	

Ⓑ			
158	162	130	
159	163	130	
160	164	130	
161	165	130	
134	135	130	

EXPLODED VIEW

A		: N09-0623-05
L	M4 x 10 (Bi)	: N35-4010-46
N	M3 x 6 (Br-Tap)	: N87-3006-46
X	M3 x 8	: N30-3008-46

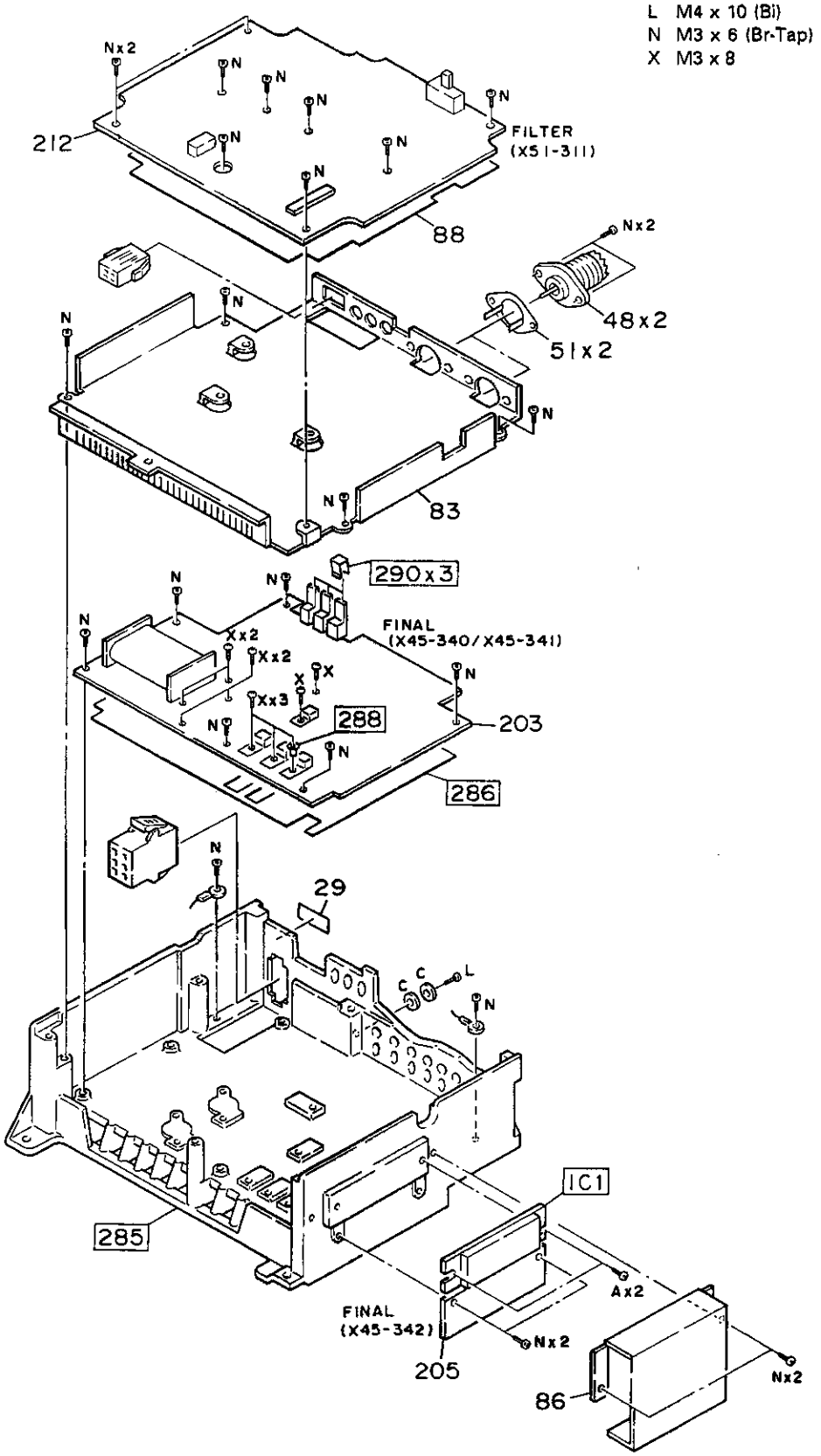

EXPLODED VIEW

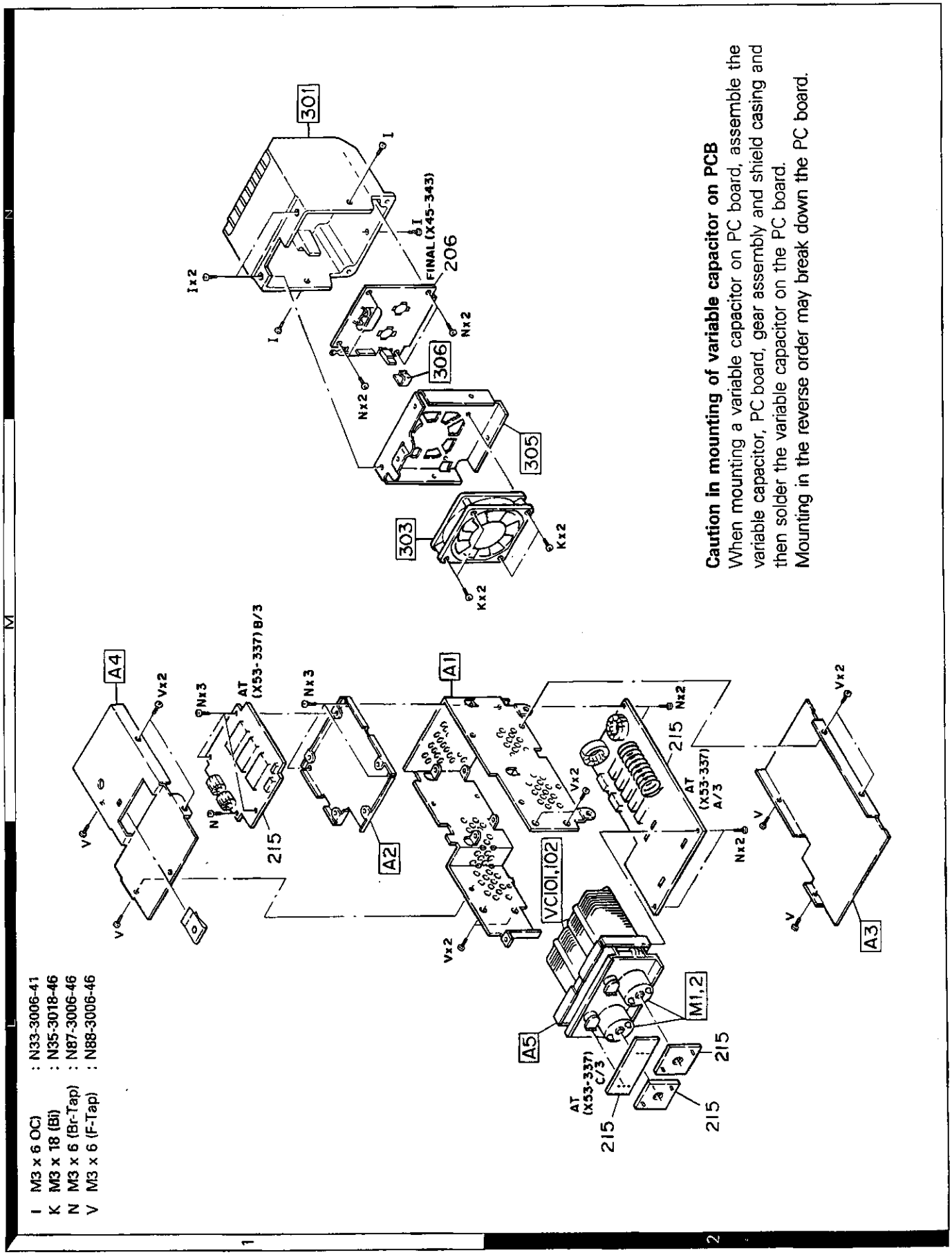

PACKING

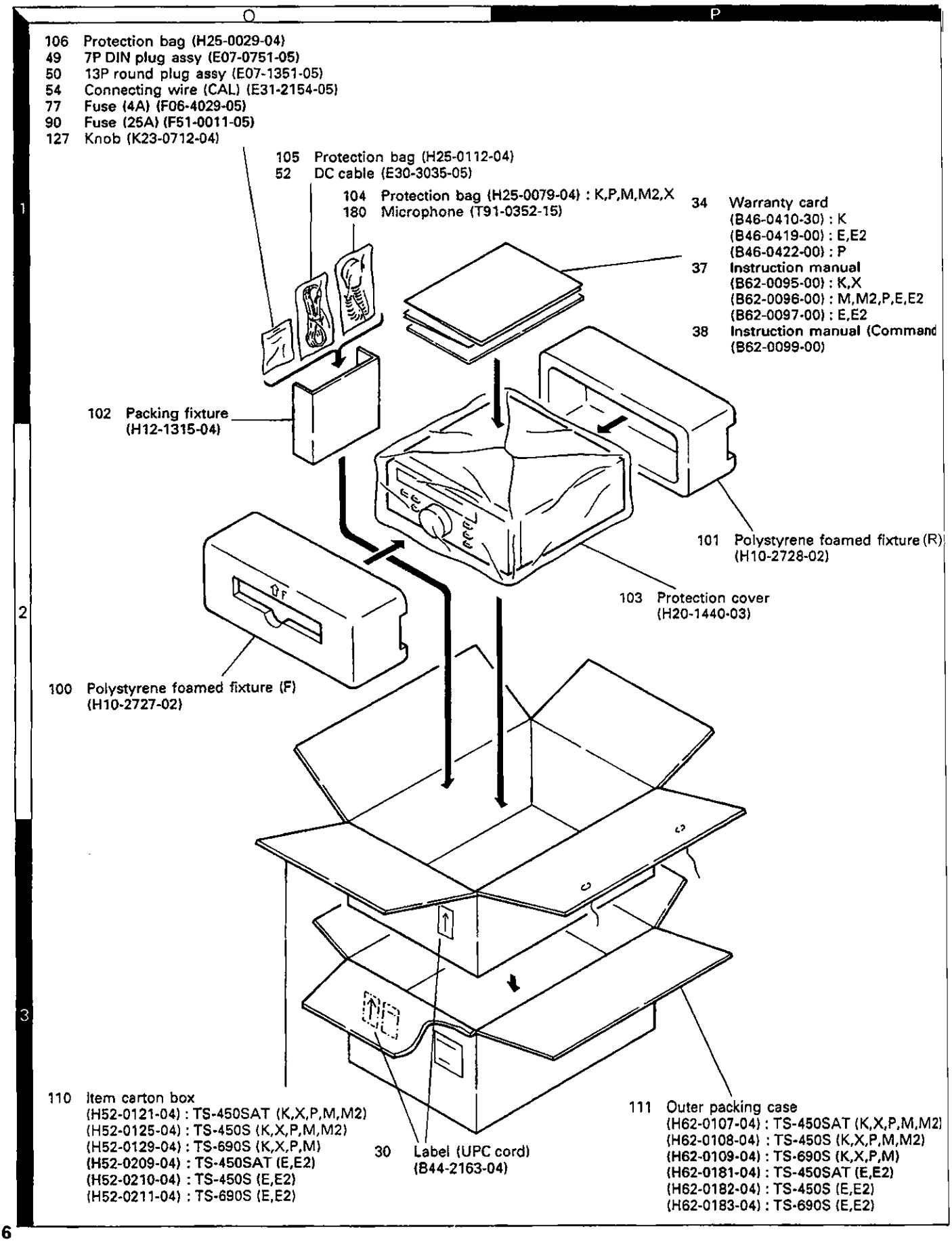
O
P
106 Protection bag (H25-0029-04)
49 7P DIN plug assy (E07-0751-05)
50 13P round plug assy (E07-1351-05)
54 Connecting wire (CAL) (E31-2154-05)
77 Fuse (4A) (F06-4029-05)
90 Fuse (25A) (F51-0011-05)
127 Knob (K23-0712-04)
105 Protection bag (H25-0112-04)
52 DC cable (E30-3035-05)
104 Protection bag (H25-0079-04) : K,P,M,M2,X
180 Microphone (T91-0352-15)
34 Warranty card
(B46-0410-30) : K
(B46-0419-00) : E,E2
(B46-0422-00) : P
37 Instruction manual
(B62-0095-00) : K,X
(B62-0096-00) : M,M2,P,E,E2
(B62-0097-00) : E,E2
38 Instruction manual (Command
(B62-0099-00)
102 Packing fixture
(H12-1315-04)
101 Polystyrene foamed fixture (R)
(H10-2728-02)
103 Protection cover
(H20-1440-03)
100 Polystyrene foamed fixture (F)
(H10-2727-02)
110 Item carton box
(H52-0121-04) : TS-450SAT (K,X,P,M,M2)
(H52-0125-04) : TS-450S (K,X,P,M,M2)
(H52-0129-04) : TS-690S (K,X,P,M)
(H52-0209-04) : TS-450SAT (E,E2)
(H52-0210-04) : TS-450S (E,E2)
(H52-0211-04) : TS-690S (E,E2)
30 Label (UPC cord)
(B44-2163-04)
111 Outer packing case
(H62-0107-04) : TS-450SAT (K,X,P,M,M2)
(H62-0108-04) : TS-450S (K,X,P,M,M2)
(H62-0109-04) : TS-690S (K,X,P,M)
(H62-0181-04) : TS-450SAT (E,E2)
(H62-0182-04) : TS-450S (E,E2)
(H62-0183-04) : TS-690S (E,E2)
1
2
3

ADJUSTMENT

Required Test Equipment

1. **DC Voltmeter (DC V.M)**
   1) Input resistance : More than 1MΩ
   2) Voltage range : 1.5 to 1000V AC/DC
   Note : A high-precision multimeter maybe used. However, accurate readings can not be obtained for high-impedance circuits.
2. **AC Ammeter**
   1) Current range : 1.5A, 3A, 20A, High-precision ammeter may be used.
3. **RF VTVM (RF V.M)**
   1) Input impedance : 1MΩ and less than 3pF, min.
   2) Voltage range : 10mV to 300V
   3) Frequency range : 10kHz to 100MHz or greate.
4. **AF Voltmeter (AF V.M)**
   1) Frequency range : 50Hz to 10kHz
   2) Input resistance : 1MΩ or greater
   3) Voltage range : 10mV to 30V
5. **AF Generator (AG)**
   1) Frequency range : 200Hz to 5kHz
   2) Output : 1mV or less to 1V, low distortion
6. **AF Dummy Load**
   1) Impedance : 8Ω
   2) Dissipation : 3W or greater
7. **Oscilloscope (SCOPE)**
   Vertical amplifier which has frequency characteristics higher than 100MHz.
   Requires high sensitivity, and external synchronization capabiliity.
8. **Tracking Generator**
   1) Center frequency : 50kHz to 90MHz
   2) Frequency deviation : Maximum ±35MHz
   3) Output voltage : 0.1V or greater
   4) Sweep rate : At least 0.5sec/cm
9. **Standard Signal Generator (SSG)**
   1) Frequency range : 50kHz to 500MHz
   2) Output : –20dB/0.1μV to 120dB/1V
   3) Output impedance : 50Ω
   4) AM and FM modulation can be possible
   Note : Generator must be frequency stable.
10. **Frequency Counter (f. counter)**
    1) Minimum input voltage : 50mV
    2) Frequency range : 500MHz or greater
    3) Output impedance : 50Ω
11. **Noise Generator**
    Must generate ignition noise containing harmonics beyond 30MHz.
12. **RF Dummy Load**
    1) Impedance : 150Ω
    2) Dissipation : 150W or greater
13. **Power Meter**
    1) Impedance : 50Ω
    2) Dissipation : 150W continuous or greater
    3) Frequency limits : 60MHz or greater
14. **Spectrum Analyzer**
    1) Frequency range : 100kHz to 500MHz or greater
    2) Bandwidth : 1kHz to 3MHz
15. **Detector**
    1) For adjustment of PLL/VCO BPF

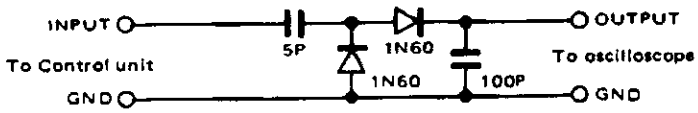

16. **Directional Coupler**
17. **Power Supply**
    PS-33, PS-53
18. **Microphone**
    MC-43S or MC60 (S8)

Preference

Japanese "SG"	American "SG"
–6dB	0.25μV
0dB	0.5μV
6dB	1μV
12dB	2μV
24dB	8μV
30dB	15.8μV
40dB	50μV
50dB	158μV
60dB	500μV
70dB	1.58mV
80dB	5mV
90dB	15.8mV
100dB	50mV
120dB	0.5V

ADJUSTMENT

Operations

1. Setting of adjustment mode

1) Power ON while pressing the AIP, XIT, SCAN keys. (MENU No. changes when turn knob of M. CH/ VFO CH.)
2) Push the UP key by MENU No. 2, write can be made for adjustment frequency to the memory channel.
3) Memory channel is displayed by MENU No. 3. Memory can be changed by UP, DOWN keys.
4) MENU No. 3~13 can be used in adjust mode.
5) In the adjust mode, ordinary memory channel is displayed by pressing CLR key.
   Channel can be changed by the VR of M.CH/ VFO CH.

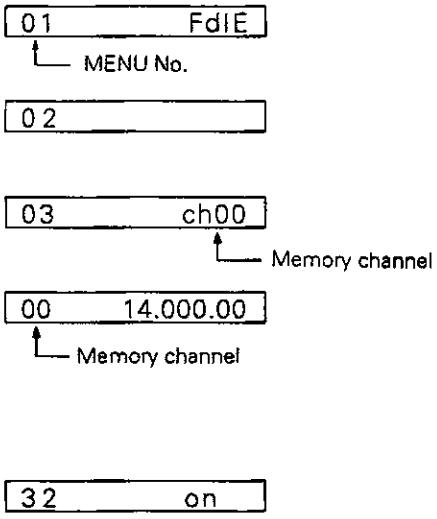

2. Setting of expansion menu mode

1) Power ON while pressing the M. IN key. (Power down 10W used only for adjustment)

3. Others

1) ANT between measuring terminals can be used on the side of HF-50M unless otherwise specified.

Frequency Table for Adjustment

Item	CH	Frequency	Mode	MENU No.	AGC	AIP
RFG	00	14.100.00	USB	03	FAST	OFF
RIT	00	14.100.00	USB	04	FAST	OFF
IF SHIFT	00	14.100.00	USB	05	FAST	OFF
MCF	00	14.100.00	USB		FAST	OFF
LO2	00	14.100.00	USB		FAST	OFF
IF AMP	00	14.100.00	USB	06	FAST	OFF
OPT FIL	01	14.099.50	USB	07	FAST	OFF
8.83 MCF	02	14.100.00	USB		FAST	OFF
IF trap	02	14.100.00	USB		FAST	OFF
MIX BAL	03	0.100.00	USB		FAST	OFF
RF AMP	04	24.800.00	USB		FAST	OFF
RF AMP	05	53.800.00	USB		FAST	OFF
FM AMP	06	28.800.00	FM		–	OFF
S-meter	06	28.800.00	FM		–	OFF
S-meter	07	14.100.00	USB	08	FAST	OFF
S-meter	08	28.800.00	USB	09	FAST	OFF
S-meter	09	50.100.00	USB	10	FAST	OFF
BEEP	10	14.100.00	USB		FAST	OFF
NOTCH	10	14.100.00	USB		FAST	OFF
NB	10	14.100.00	USB		FAST	OFF
RF ATT	10	14.100.00	USB		FAST	OFF
RF GAIN	10	14.100.00	USB		FAST	OFF
AGC	10	14.100.00	USB		F/S	OFF
VOICE	10	14.100.00	USB		FAST	OFF
S/N	11	0.550.00	AM		FAST	OFF
S/N	12	1.550.00	AM		FAST	OFF
S/N	13	1.800.00	LSB		FAST	OFF
S/N	14	3.550.00	LSB		FAST	OFF
S/N	15	7.100.00	LSB		FAST	OFF
S/N	16	10.100.00	USB		FAST	OFF
S/N	17	14.100.00	USB		FAST	OFF
S/N	18	21.100.00	USB		FAST	OFF
S/N	19	24.800.00	USB		FAST	OFF
S/N	20	28.800.00	USB		FAST	OFF

Item	CH	Frequency	Mode	MENU No.	AGC	AIP
S/N	21	29.800.00	FM		–	OFF
S/N	22	51.100.00	FM		–	OFF
S/N	23	50.100.00	USB		FAST	OFF
S/N	24	53.800.00	USB		FAST	OFF
SQL	25	14.100.00	USB		FAST	OFF
SQL	26	28.800.00	FM		–	OFF
ALC voltage	27	29.600.00	CW		FAST	OFF
TX AMP	27	29.600.00	CW		FAST	OFF
MIX BIA	27	29.600.00	CW		FAST	OFF
MIX BIA	28	53.500.00	CW		FAST	OFF
50M AMP	29	51.900.00	CW		FAST	OFF
NULL	30	3.500.00	CW		FAST	OFF
ALC	31	14.200.00	CW		FAST	OFF
100, 50W	32	24.900.00	CW		FAST	OFF
100, 50W	33	29.600.00	CW		FAST	OFF
100, 50W	34	53.500.00	CW		FAST	OFF
10W	35	51.900.00	CW		FAST	OFF
10W	36	14.200.00	CW		FAST	OFF
10W	37	1.840.00	CW		FAST	OFF
MIN PWR	38	14.200.00	CW		FAST	OFF
CAR point	39	14.200.00	USB	11	FAST	OFF
CAR point	39	14.200.00	USB	12	FAST	OFF
ALC meter	39	14.200.00	USB	13	FAST	OFF
CAR sup.	39	14.200.00	USB		FAST	OFF
Spurious	40	53.900.00	CW		FAST	OFF
Spurious	41	21.200.00	CW		FAST	OFF
SWR	42	14.200.00	CW		FAST	OFF
SWR Meter	43	1.840.00	CW		FAST	OFF
FM DEV	44	28.700.00	FM		–	OFF
FM MIC	44	28.700.00	FM		–	OFF
Processor	45	14.200.00	USB		FAST	OFF
Side tone	45	14.200.00	CW		FAST	OFF
Fan motor	46	51.900.00	CW		FAST	OFF

ADJUSTMENT

Front Panel (TS-450S)

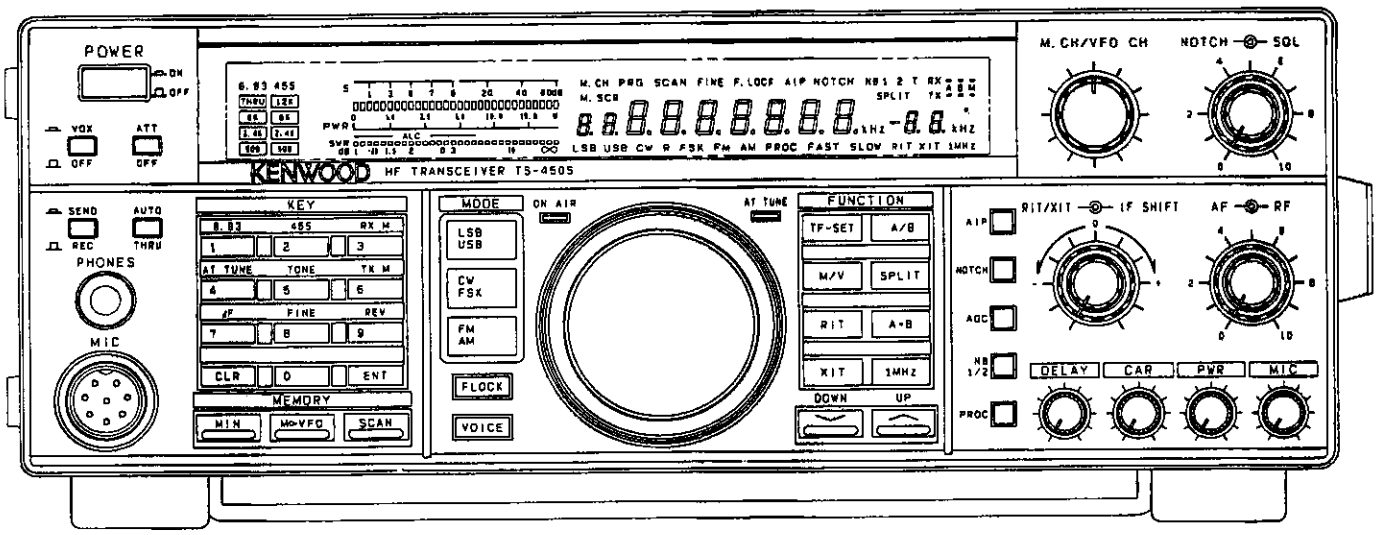

Rear Panel (TS-450S)

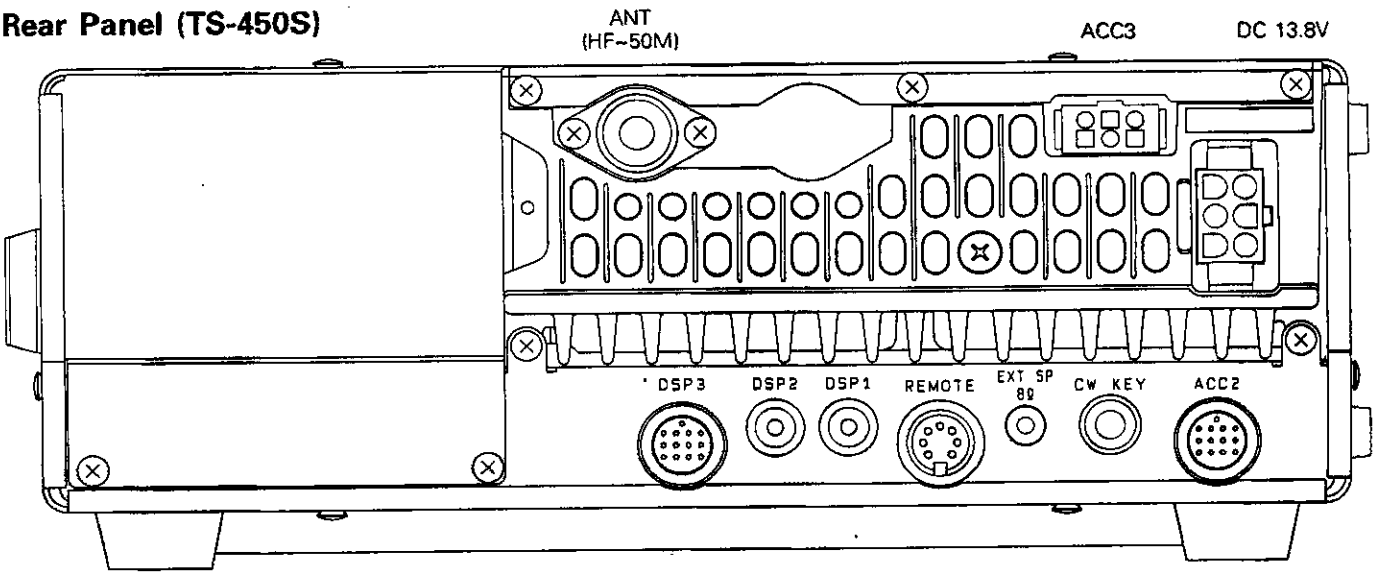

Rear Panel (TS-690S)

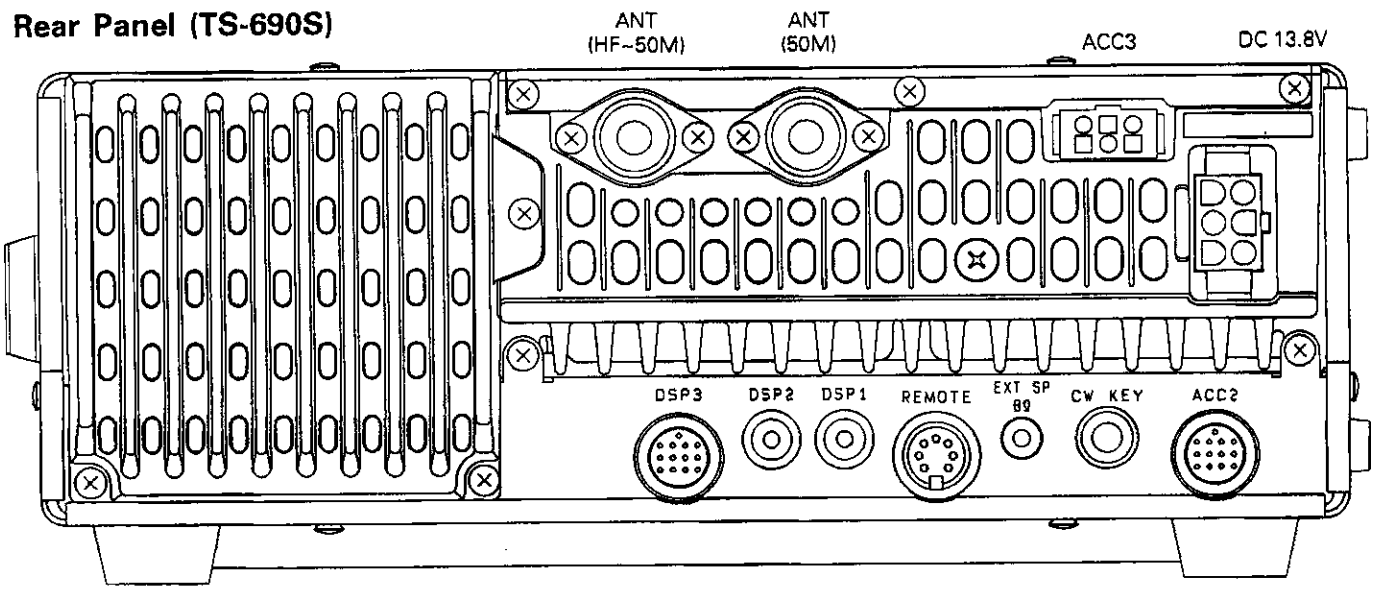

TS-450S/690S

ADJUSTMENT

Initialize Setting and Display Check

Item	Condition	Measurement			Adjustment			Specifications/Remarks
		Test-equipment	Unit	Terminal	Unit	Parts	Method	
1. Setting					IF	VR13	Set to mechanical centered point.	
						L5 *S1	Put the core into the deepest mechanically.	Not to break the core. *S1 → OFF
2. Display check and reset	1) DC IN : 13.8V Connect the DC plug FILTER S1 : HF (TS-690S) POWER : ON After checked POWER : OFF Pushing A=B, POWER : ON	Display					Reset display Display f. : 14.000.00 MODE : USB FUNCTION RX : A FUNCTION TX : A METER : ALC FILTER 8.83 : 6kHz FILTER 455 : 2.4kHz AGC : SLOW	Must display correctly. Must be no generation of smoke or abnormal noise. Should be at the reset frequency.

PLL and CAR Adjustment

Item	Condition	Measurement			Adjustment			Specifications/Remarks
		Test-equipment	Unit	Terminal	Unit	Parts	Method	
1. Reference OSC		f. counter	CAR	TP1 (20M)	PLL	TC1	20.000.000MHz	±20Hz
2. LO3 8.375MHz		Oscilloscope (100MHz) f. counter		CN3-1	CAR	L21	1.00Vp-p Make adjustment in the drawing direction of core.	±0.05Vp-p
						TC1	8.375MHz	±10Hz
3. 60MHz BPF		Oscilloscope (100MHz or more)		IC5-5		L16 L17	MAX. (0.7Vp-p)	
4. DLO	1) Frequency : 14.200MHz			CN4		L18~ L20	MAX. (0.2Vp-p/50Ω)	
5. PLL IF BPF TS-690S	1) Frequency : 50.200MHz	Oscilloscope	PLL	TP5	PLL	L31 L32	MAX. (0.1Vp-p)	
6. VCO	1) Frequency : 0.03MHz : 10.490MHz	DC V.M		TP2		L5	2.5V 7.0V or less check.	
	2) Frequency : 10.500MHz : 21.490MHz					L7	2.5V 7.0V or less check.	
	3) Frequency : 21.500MHz : 40.490MHz					L9	2.5V 7.0V or less check.	
TS-690S	4) Frequency : 60.000MHz : 40.500MHz					L11	6.9V 2.5V or more chack.	
7. VCO2				TP3	VCO2 X58-3390	TC1	5.0V	

Adjustment Mode setting

Item	Condition	Measurement			Adjustment			Specifications/Remarks
		Test-equipment	Unit	Terminal	Unit	Parts	Method	
1. Memory write	1) POWER : OFF Pushing AIP, XIT and SCAN, POWER : ON				Front panel	M.CH /VFO	Select MENU No. 2. UP key : 1 push. Select MENU No. 3.	02 Beep tone check 03 ch00

ADJUSTMENT

Receiver Section Adjustment

Item	Condition	Measurement			Adjustment			Specifications/Remarks
		Test-equipment	Unit	Terminal	Unit	Parts	Method	
1. RF GAIN	1) CH : 00 (14.100.00, USB) RF GAIN : MAX	DC V.M	IF	CN10-5	IF	VR10	3.0V	±0.03V
2. RIT	1) RIT VR : Center				Front panel	M.CH /VFO	Select MENU No. 4. UP key : 1 push	04 Beep tone check
3. IF SHIFT	1) IF SHIFT VR : Center						Select MENU No. 5. UP key : 1 push	05 Beep tone check
4. MCF	1) MODE : FM Tracking generator Output : -30dBm Center f. : 73.05MHz	Spectrum analyzer Tracking generator	RF TP2 TP1		RF	L53~ L55	Repeat 2~3 times. Adjust it to make gain maximum, and make the band flat as shown in the right.	Ripple : Within 1dB 73.05 73.043 73.057 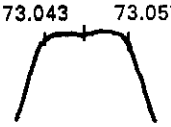
5. LO2		Oscilloscope (100MHz)	RF	TP5	RF	VR6	0.80Vp-p	±0.05Vp-p
6. IF AMP	1) CH : 00 (14.100.00, USB) SSG f. : 14.10MHz SSG ATT : 40~-6dBμ Connect the YK-88S-1 to RF unit CN12 and CN13.	SSG DM. SP Oscilloscope AF V.M YK-88S-1	Rear panel RF	ANT EXT. SP CN12 CN13	Front panel RF IF	M.CH /VFO L71~ L73 L76 L77 L1 L6 L7	Select MENU No. 6. Repeat 2~3 times. AF output MAX.	06
	2) CH : Changeover				Front panel	M.CH /VFO	Select MENU No. 3. UP key : 1 push	03 ch00 03 ch01
7. Option filters check	1) CH : 01 (14.099.50, USB) SSG ATT : 10dBμ Connect the filters to each connectors.	YK-88C-1 YK-455C-1	RF IF	CN14 CN15 CN17 CN18	Front panel	M.CH /VFO	Select NEMU No. 7.	07 Signal shall be received.
	2) CLEAR key : 1 push (Adjustment mode reset)							
8. 8.83MHz MCF	1) CH : 02 (14.100.00, USB) SSG f. : 14.10MHz SSG ATT : 0dBμ After adjusted disconnect the filters.				RF	L74 L75	Repeat 2 times. AF output MAX.	
9. IF trap	1) RF GAIN : MAX SSG f. : 73.050MHz SSG ATT : 100 → 80dBμ					TC1 TC2	AF output MIN.	
10. MIX BAL	1) CH : 03 (0.100.00, USB) AF VR : MAX SSG RF : OFF After adjusted AF VR : MIN					VR1	AF output MIN.	
11. RF AMP	1) CH : 04 (24.800.00, USB) SSG ATT : 0~-10dBμ (AGC shall not be applied.)					L35	AF output MAX.	
TS-690S	2) CH : 05 (53.800.00, USB)					L41	AF output MAX.	
12. FM IF AMP	1) CH : 06 (28.800.00, FM) SSG ATT : 40dBμ SSG MOD : 1kHz SSG DEV : 3.0kHz				IF	L9	AF output MAX.	
13. S-meter (FM)	1) SSG ATT : 28dBμ					VR4	S9 + 60dB 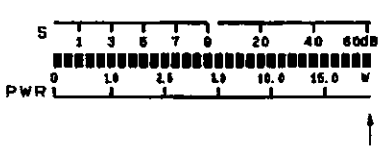	

ADJUSTMENT

Item	Condition	Measurement			Adjustment			Specifications/Remarks
		Test-equipment	Unit	Terminal	Unit	Parts	Method	
	1) Adjustment mode setting POWER : OFF Pushing AIP, XIT and SCAN, POWER : ON	SSG DM. SP Oscilloscope AF V.M	Rear panel	ANT EXT. SP	Front panel	M.CH /VFO	Select MENU No. 3. UP key : 1 push	03 ch06 03 ch07
14. S-meter (SSB)	1) CH : 07 (14.100.00, USB) SSG RF : OFF	DC V.M	IF	TP (SM)	Front panel	M.CH	Select MENU No. 8.	08
					IF	VR5	0.6V	±0.01V
(S1)	2) SSG ATT : 6dBμ					VR1	Just after lighting of S1 (3 dots).	
(S9)	3) SSG ATT : 30dBμ						UP key : 1 push	Beep tone check
(S9 + 60)	4) SSG ATT : 90dBμ						UP key : 1 push	Beep tone check
	5) CH : Changeover				Front panel	M.CH /VFO	Select MENU No. 3. UP key : 1 push	03 ch07 03 ch08
	6) CH : 08 (28.800.00, USB) SSG ATT : 30dBμ						Select MENU No. 9. UP key : 1 push	09 Beep tone check
	7) SSG ATT : 90dBμ						UP key : 1 push	Beep tone check
TS-690S	8) CH : Changeover						Select MENU No. 3. UP key : 1 push	03 ch08 03 ch09
	9) CH : 09 (50.100.00, USB) SSG ATT : 26dBμ						Select MENU No. 10. UP key : 1 push	10 Beep tone check
	10) SSG ATT : 86dBμ						UP key : 1 push	Beep tone check
	Note : When UP key is erroneously pressed while setting S-meter, return the MENU No. by 1 to reset.							
	1) CLEAR key : 1 push (Adjustment mode reset)							
15. Beep tone	1) CH : 10 (14.100.00, USB) AF VR : MIN CW/FSK key : Push several times.	SSG DM. SP Oscilloscope AF V.M	Rear panel	ANT EXT. SP	IF	VR6	0.2Vp-p	±0.1Vp-p (0.1~0.3Vp-p)
16. Notch	1) NOTCH : ON MODE : USB SSG f. : 14.101.000MHz SSG ATT : 60dBμ				IF Front panel	VR2 NOTCH VR	AF output MIN. with VR2 and NOTCH VR alternately.	AF level difference for NOTCH ON/OFF should be over 35dB.
							Check	NOTCH lights.
	2) SSG f. : 14.102.600MHz				Front panel	NOTCH VR	AF output MIN.	AF level difference for NOTCH ON/OFF should be over 35dB.
	3) SSG f. : 14.100.500MHz After adjusted, NOTCH : OFF							
17. NB	1) Noise generator level : S5~S9 (S-meter) NB SW : 1 push	Noise generator EXT. SP DC V.M	Rear panel RF	ANT EXT. SP TP4			Check	NB1 lights.
					RF	L86 L87	Voltage MIN.	
	2) NB SW : Push several times. Display : NB2/OFF						Adjust the noise generator output to S-meter 5 and 9 dots lights.	Noise disappears.
	3) NB SW : Push several times. Display : NB1/OFF After adjusted, NB : OFF							Whenever NB SW is pressed, the display changes in sequence of NB1 – NB2 – OFF.
18. RF ATT	1) ATT SW : ON After checked, ATT SW : OFF	SSG DM. SP Oscilloscope AF V.M	Rear panel	ANT EXT. SP			S9	52±6dBμ (46~58dBμ)
19. RF GAIN	1) RF GAIN : MIN SSG ATT : 60dBμ After checked, RF GAIN : MAX						Check	S-meter scale over. No AF output.

ADJUSTMENT

Item	Condition	Measurement: Test-equipment	Measurement: Unit	Measurement: Terminal	Adjustment: Unit	Adjustment: Parts	Adjustment: Method	Specifications/Remarks
20. AGC	1) AGC : 1 push (FAST)	SSG DM. SP Oscilloscope AF V.M VS-2	Rear panel	ANT EXT. SP			Check the display of S-meter by turning SSG RF ON/OFF from the receiving state of signal.	FAST lignts. It should move quickly.
	2) AGC : 1 push (SLOW)							SLOW lights. It moves slowly as compared with FAST.
21. Voice	1) VS-2 installed model only POWER : ON					Front panel	VOICE key : 1 push	The displayed frequency can be heard vocally.
22. S/N	1) CH : Indicated below AF VR : 1.0V/8Ω SSG f. : Indicated below However, USB : +1kHz LSB : −1kHz							Note : As AIP will be turned on automatically at frequencies of 9.5kHz or less, turn it off with the AIP SW.

M. CH	Frequency	MODE	SSG ATT	SSG MOD	SSG DEV		
11	550kHz	AM	36dBμ	1kHz	30%	S/N measurement	10dB or more
12	1.550MHz	AM	36dBμ	1kHz	30%		
13	1.800MHz	LSB	−6dBμ	OFF		S/N measurement MAX sensitivity measurement	10dB or more 0.7V/8Ω or more
14	3.550MHz	LSB	−6dBμ	OFF			
15	7.100MHz	LSB	−6dBμ	OFF			
16	10.100MHz	USB	−6dBμ	OFF			
17	14.100MHz	USB	−6dBμ	OFF			
18	21.100MHz	USB	−6dBμ	OFF			
19	24.800MHz	USB	−9dBμ	OFF			
20	28.800MHz	USB	−9dBμ	OFF			
21	29.800MHz	FM	−6dBμ	1kHz	±3kHz	SINAD sensitivity measurement	12dB or more
22	51.100MHz	FM	−6dBμ	1kHz	±3kHz		
23	50.100MHz	USB	−10dBμ	OFF		S/N masurement MAX sensitivity measurement	10dB or more 0.7V/8Ω or more
24	53.800MHz	USB	−10dBμ	OFF			

Item	Condition	Measurement: Test-equipment	Measurement: Unit	Measurement: Terminal	Adjustment: Unit	Adjustment: Parts	Adjustment: Method	Specifications/Remarks
23. Squelch (SSB)	1) CH : 25 (14.100.00, USB) SQL VR : Center SSG RF : OFF	SSG DM. SP Oscilloscope AF V.M	Rear panel	ANT EXT. SP	IF	VR3	Set to the point squelch closes.	
	2) SSG f. : 14.101.000MHz SSG ATT : 8dBμ						Check	Squelch should open.
	3) SQL VR : MAX							Squelch should close.
	4) SSG ATT : 30dBμ After checked, SQL VR : MIN							Squelch should open
24. Squelch (FM)	1) CH : 26 (28.800.00MHz, FM) SSG RF : OFF				Front panel	SQL VR	Adjust SQL VR is slowly increase noise just goes off.	Knob position 8 : 00~12 : 00
	2) SSG f. : 28.800.00MHz SSG ATT : −14dBμ SSG MOD : 1kHz SSG DEV : 3.0kHz						Check	Squelch should open.
	3) SQL VR : MAX							Squelch should close.
	4) SSG ATT : 0dBμ After checked, SQL VR : MIN							Squelch should open.

ADJUSTMENT

Transmitter Section Adjustment

Item	Condition	Measurement			Adjustment			Specifications/Remarks
		Test-equipment	Unit	Terminal	Unit	Parts	Method	
1. ALC voltage	1) CH : 27 (29.600.00, CW)	DC V.M	RF	CN1-7 (ALC)	IF	VR14	2.5V	+0.05V, −0.0V
2. TX AMP	1) RF unit VR2 : Center CAR VR : 10 : 00~11 : 00 PWR VR : MAX STBY : SEND	50Ω load Oscilloscope	RF	CN9	RF	L66~ L68 L89 L91~ L94	Repeat 2~3 times for MAX. L91 takes the peak in the core drawing direction.	10dBm or more.
3. MIX BIAS	1) STBY : SEND					VR4	MAX.	10dBm or more.
	2) CH : 28 (53.500.00, CW) **TS-690S except E2** CH : 29 (51.900.00, CW) **TS-690S E2** After adjusted, RF unit CN9 connect.					VR3	MAX.	10dBm or more.
4. 50MHz AMP **TS-690S**	1) CH : 29 (51.900.00, CW) PWR VR : MAX CAR VR : 10W or less STBY : SEND	Power meter	Rear panel	ANT	50M 10W Final	TC1	MAX.	
5. 50MHz final bias **TS-690S**	1) CH : 29 (51.900.00, CW) CAR VR : MIN MIC VR : MIN Final unit VR1 : MIN STBY : SEND	Ammeter			50M 50W Final		Record current at VR1 is MIN.	This current is total current.
						VR1	Total current + 250mA.	
6. HF final bias	1) CH : 31 (14.200.00, CW) CAR VR : MIN MIC VR : MIN Final unit VR1, VR2 : MIN STBY : SEND						Record current at VR1 and VR2 are MIN.	This current is total current.
						VR1	Total current + 250mA.	
						VR2	(Total current + 250mA) + 250mA	
7. NULL	1) CH : 30 (3.500.00, CW) CAR VR : 10W STBY : SEND	DC V.M	Filter	CN8-1	Filter	TC1	MIN	
8. ALC	1) CH : 31 (14.200.00, CW) IF unit VR20 : Center CAR VR : Increasingly MAX. STBY : SEND				IF	VR15	105W	±5W
9. ALC frequency response	1) CH : 33 (29.600.00, CW) STBY : SEND				Filter	VR1	105W	±5W
10. Power down 50W	1) CH : 34 (53.500.00, CW) **TS-690S except E2** CH : 35 (51.900.00, CW) **TS-690S E2** STBY : SEND	Power meter	Rear panel	ANT	IF	VR17	Mechanical center point	
						VR19	51W	±1W
11. MIN power	1) CH : 38 (14.200.00, CW) PWR VR : MIN CAR VR : MAX STBY : SEND After adjusted, PWR VR : MAX				IF	VR18	10.0W	±1.0W
12. Power meter	1) PWR VR : 88W STBY : SEND					VR21	90W Then, set diplay PWR meter just after one disappears.	After adjustment, turn the PWR VR while setting 2~1W up and display dots light as shown in the left.
	1) Adjustment mode setting POWER : OFF Holding AIP, XIT and SCAN, POWER : ON				Front panel	M.CH /VFO	Select MENU No. 3. UP key : 1 push	03 ch38 03 ch39

ADJUSTMENT

Item	Condition	Measurement			Adjustment			Specifications/Remarks
		Test-equipment	Unit	Terminal	Unit	Parts	Method	
13. CAR point	1) CH : 39 (14.200.00, USB) MIC terminal : 2 tone AG1 : 300Hz/5mV AG2 : 2700Hz/5mV MIC VR : Level at which not activated. STBY : SEND	Power meter Oscilloscope AG AF V.M	Rear panel Front panel	ANT MIC	Front panel	M.CH /VFO	Select MENU No. 11 or No. 12. Adjust so that waveform cross by UP and DOWN key.	OK NG
14. ALC meter (Start point)	1) PWR VR : MAX MIC terminal : Single tone AG1 : 1kHz/5mV STBY : SEND				Front panel	M.CH /VFO MIC VR	Select NEMU No. 13. Adjust so that ALC meter one dot lights with MIC VR. UP key : 1 push	13 SWR ALC dB 1 -20 1.5 2 0 3 Beep tone check
(Zone MAX)	2) AG1 : 1kHz/10mV STBY : SEND						UP key : 1 push	Beep tone check
(Full scale)	3) AG1 : 1kHz/20mV STBY : SEND						UP key : 1 push	Beep tone check
	4) AG1 : 1kHz/2mV CAR VR, PWR VR : MAX MIC VR : MAX STBY : SEND				RF	L92	In the core drawing direction, set ti to the indication start point of ALC meter. (Just before ALC meter one dot lights)	
15-1. Power doen 10W	1) CH : Changeover				Front panel	M.CH /VFO	Select MENU No. 3. DWN key : 1 push	03 ch39 03 ch38
	2) CH : 38 (14.200.00, CW) AT10 : Compulsory ON						Select MENU No. 16. UP key : 1 push	16 off 16 on
	3) STBY : SEND				IF	VR20	11W	±1W
	4) After adjusted, AT10 : Reset				Front panel		DWN key : 1 push	16 off
16. EEPROM data write	1) After writing, CLEAR key : 1 push (Adjustment mode reset)				Front panel	M.CH /VFO	Select MENU No. 17. UP key : 1 push	17 Beep tone check
	Note : be sure to write this data when making readjustment of the following items in repair. (RF G, RIT, IF SHIFT, S-meter, CAR point, ALC meter)							
15-2. Power down 10W **E2**	1) CH : 37 (1.840.00, CW) STBY : SEND						Check	10~12W
17. CAR suppression	1) CH : 39 (14.200.00, USB) MIC VR : MIN MODE : USB/LSB STBY : SEND	Power meter Coupler Spectrum analyzer (Oscilloscope)	Rear panel	ANT	IF	VR8 VR9	MIN. (adjust alternately). Adjust for no difference between USB and LSB.	-60dB or less.
18. Spurious	1) CH : 40 (53.900.00, CW) Connect to the spectrum analyzer to RF unit CN9. STBY : SEND	Spectrum analyzer	RF	CN9	RF	VR5	53.9MHz ± 1.5MHz Spurious : MIN **Except TS-450S and TS-690S (E2)** Mechanical center point **TS-450S, TS-690S (E2)**	-60dB or less.
	2) CH : 41 (21.200.00, CW) STBY : SEND After adjusted, connect the CN9.					VR2	Near 11MHz Spurious : MIN.	-50dB or less.

ADJUSTMENT

Item	Condition	Measurement			Adjustment			Specifications/Remarks
		Test-equipment	Unit	Terminal	Unit	Parts	Method	
19. SWR protection	1) CH : 42 (14.200.00, CW) CAR VR : MAX PWR VR : MAX STBY : SEND	Through-type power meter 150Ω dummy	Rear panel	ANT	IF	VR16	40W	±1.0W
20. SWR meter	1) CH : 43 (1.840.00, CW) TX M : 1 push STBY : SEDN						Display check	SWR lights.
						VR22	Adjust just after SWR3 dot lights.	
21. FM MAX DEV (WIDE)	1) CH : 44 (28.700.00, FM) MIC terminal : Single tone AG1 : 1kHz/30mV **X,E,E2** AG1 : 1kHz/50mV **K,M,M2,P** STBY : SEND	Power meter Coupler Linear detector AG AF V.M	Rear panel Front panel	ANT MIC	IF	VR11	±4.6kHz	±0.1kHz
22. FM MIC sensitivity (WIDE)	1) AG1 : 1kHz/3mV **X,E,E2** AG1 : 1kHz/5mV **K,M,M2,P** STBY : SEND					VR23	±3.0kHz	±0.1kHz
23. FM MAX DEV (NARROW)	1) 455 key : 1 push (6K) AG1 : 1kHz/30mV **X,E,E2** AG1 : 1kHz/50mV **K,M,M2,P** STBY : SEND					VR12	±2.3kHz	±0.1kHz
24. FM MIC sensitivity (NARROW)	1) AG1 : 1kHz/3mV **X,E,E2** AG1 : 1kHz/5mV **K,M,M2,P** STBY : SEND After checked, 455 key : 1 push (12K)						Check	±1.4~1.6kHz
25. Sub tone (Option TU-8 installed model)	1) MIC terminal : Open SPLIT : ON TONE : ON STBY : SEND	TU-8	IF	W3			Check	Tone appear. ±0.5~0.9kHz
26. Processor	1) CH : 45 (14.200.00, CW) MODE : USB MIC terminal : Single tone AG : 1kHz/10mV MIC VR : 50W STBY : SEND							
	2) AG : 1kHz/1mV PROC SW : ON STBY : SEND						Check	Within ±3dB
27. Side tone level	1) MODE : CW AF VR : Center Key : Down	DM. SP AF V.M Key	Rear panel	EXT. SP CW key	IF	VR7	0.2V/8Ω	0.18~0.22V

ADJUSTMENT

Adjustment Points (Upper)

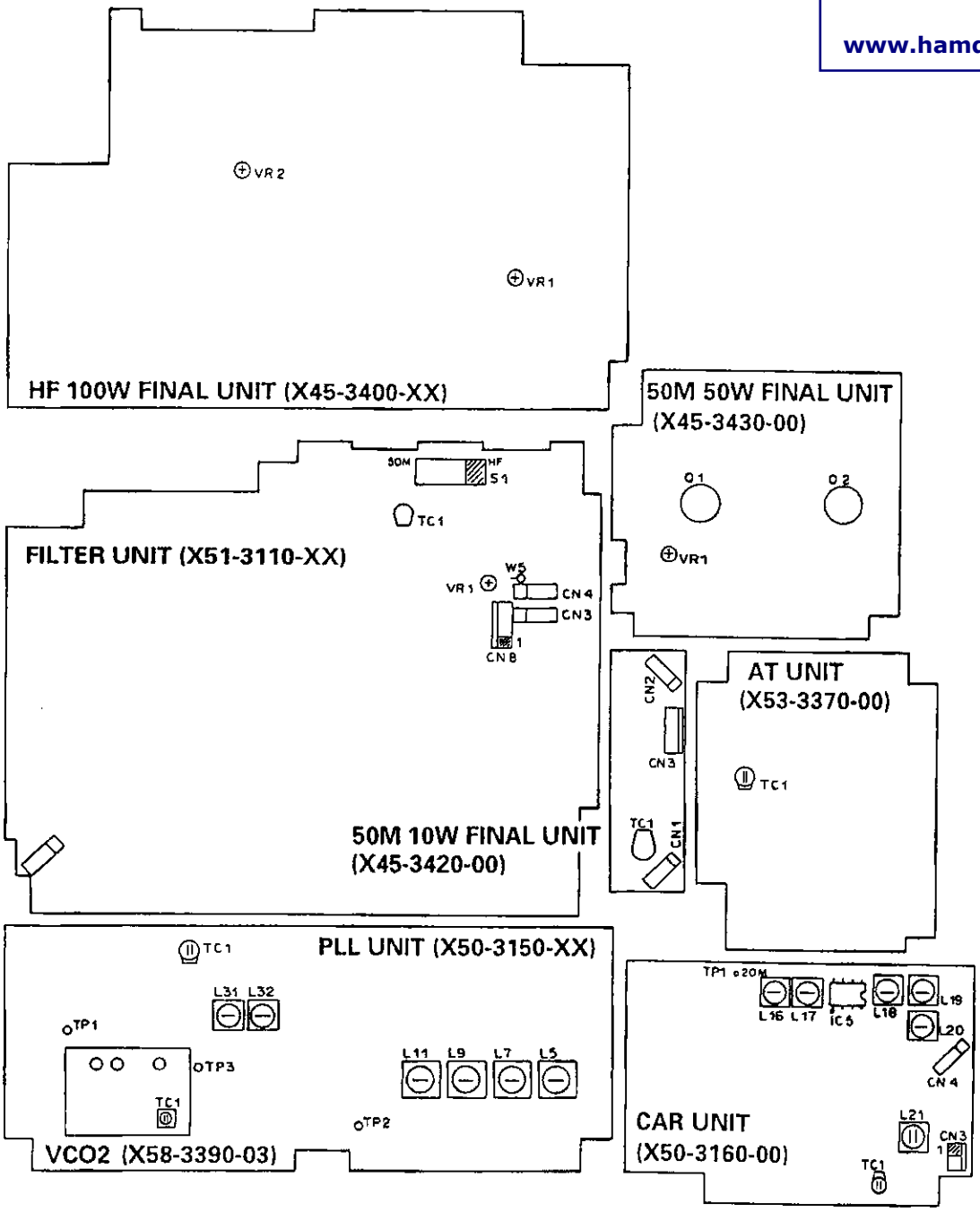

FILTER UNIT (X51-3110-XX)
TC1 : NULL
VR1 : ALC frequency response

HF 100W FINAL UNIT (X45-3400-XX)
VR1,2 : Final bias

PLL UNIT (X50-3150-XX)
L5,7,9,11 : VCO
L31,32 : PLL IF BPF
TC1 : Reference OSC

VCO2 (X58-3390-03)
TC1 : VCO2

50M 50W FINAL UNIT (X45-3430-00)
VR1 : Final bias

50M 10W FINAL UNIT (X45-3420-00)
TC1 : 50M AMP

CAR UNIT (X50-3160-00)
L16,17 : 60MHz BPF
L18~20 : DLO
L21 : LO3 (8.375MHz)
TC1 : LO3 (8.375MHz)

ADJUSTMENT

Adjustment Points (Lower)

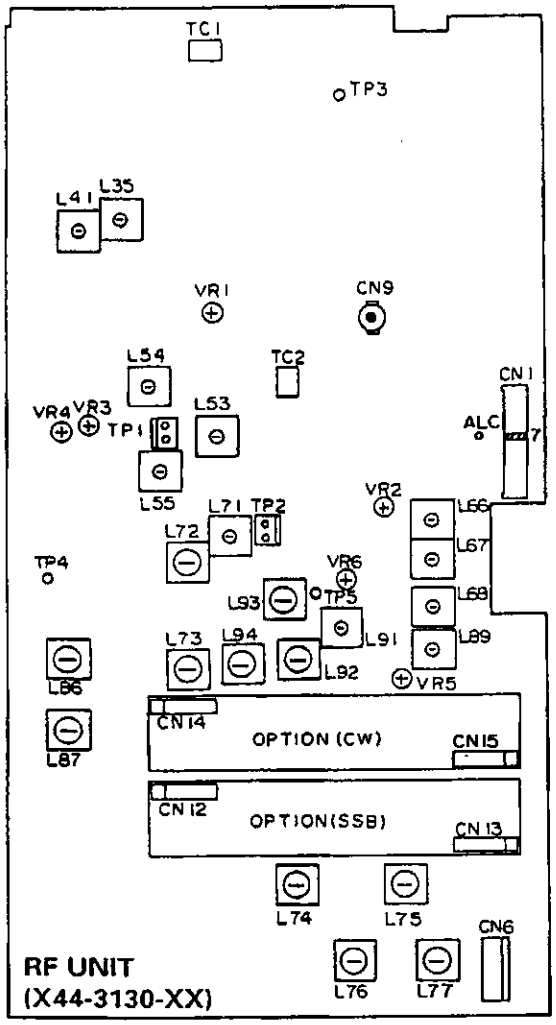

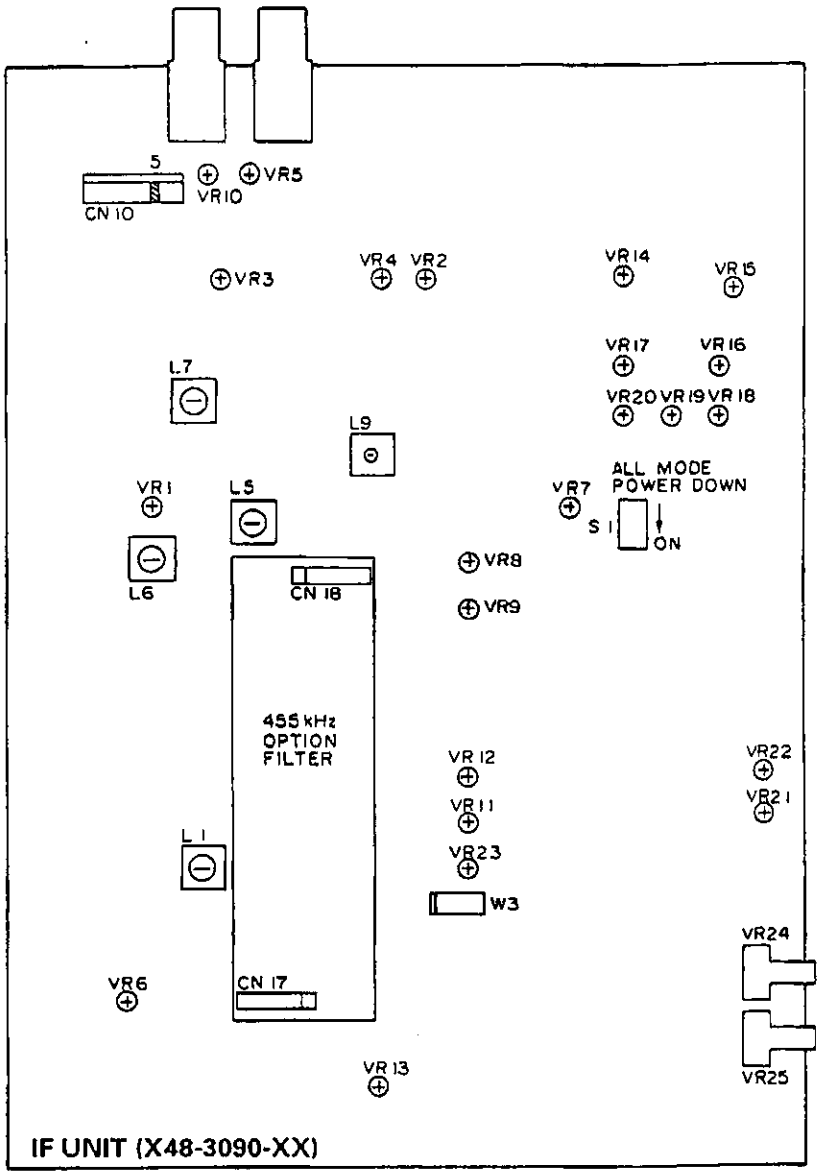

RF UNIT (X44-3130-XX)
L35 : RF AMP
L41 : RF AMP
L53~55 : MCF
L66~68,89,91~94 : TX AMP
L71~73,76,77 : IF AMP
L74,75 : 8.83MHz MCF
L86,87 : NB
L92 : ALC meter
TC1,2 : IF trap
VR1 : MIX BAL
VR2 : Spurious
VR3,4 : MIX BIAS
VR5 : Spurious
VR6 : LO2

IF UNIT (X48-3090-XX)
L1,6,7 : IF AMP
L5 : Setting
L9 : FM IF AMP
VR1 : S-meter (S1)
VR2 : Notch
VR3 : Squelch (SSB)
VR4 : S-meter (FM)
VR5 : S-meter (SSB)
VR6 : Beep tone
VR7 : Side tone level
VR8,9 : CAR suppression
VR10 : RFG
VR11 : FM MAX DEV (WIDE)
VR12 : FM MAX DEV (NARROW)
VR13 : Setting
VR14 : ALC voltage
VR15 : ALC
VR16 : SWR protection
VR17,19 : Power down 50W
VR18 : MIN power
VR20 : Power down 10W
VR21 : Power meter
VR22 : SWR Meter
VR23 : FM MIC sensitivity (WIDE)

TERMINAL FUNCTION

Connector No.	Terminal No.	Terminal Name	I/O	Terminal Function
SWITCH UNIT (X41-3170-00)				
CN1	1	PH3	–	Phone jack GND.
	2	PH2	O	Phone jack speaker signal (Off when phone install).
	3	SPK	I	Phone jack speaker signal (Off when phone install).
CN2	1	FM SQ1	I	Squelch volume voltage 1 (FM).
	2	NFM SQ2	O	Squelch volume voltage 2 (except FM).
	3	NTR	I	Notch volume voltage.
	4	NFM SQ1	I	Squelch volume voltage 1 (except FM).
	5	NTG	O	Notch volume voltage GND.
	6	FM SQ2	O	Squelch volume voltage 2 (FM).
CN3	1	AV2	O	AF volume signal 2.
	2	GND	–	GND.
	3	AV1	I	AF volume signal1.
	4	GND	–	GND.
	5	RIB	I	RIT reference voltage (5V).
	6	IFB	I	IF shift reference voltage (5V).
	7	RIT	O	RIT volume voltage.
	8	IFS	O	IF shift volume voltage.
	9	GND	–	GND.
CN4	1	PC2	O	Power control volume voltage 2.
	2	PC1	I	Power control volume voltage 1.
	3	MIC VR1	I	MIC volume signal 1.
	4	MIC VR2	O	MIC volume signal 2.
	5	GND	–	GND.
	6	GND	–	GND.
	7	CV	O	Carrier volume voltage.
	8	TXB	I	Transmission power (8V).
CN5	1	NC	–	
	2	DVR2	O	Delay volume voltage 2.
	3	DVR1	I	Delay volume voltage 1.
CN6	1	GND	–	GND.
	2	CK4	O	Sub encoder pulse 4 signal.
	3	CK3	O	Sub encoder pulse 3 signal.
CN7	1	RFG2	O	RF GAIN volume voltage 2.
	2	RFG1	I	RF GAIN volume voltage 1.
RF UNIT (X44-3130-XX)				
CN1	1	14V	I	14V.
	2	8V	I	8V.
	3	RL	I	Relay power supply (14V). Relay
	4	TXB	I	Transmission power supply (8V).
	5	RXB	I	Reception power supply (8V).
	6	AGC	I	AGC voltage (3.0V when full gain).
	7	ALC	I	ALC voltage (2.5V when full gain).
	8	50MC	O	50MHz band data. ("L" when 40.5–60MHz)
	9	AMB	I	AM mode voltage (8V).
	10	CKY	I	Keying control signal.
	11	28MC	O	28MHz band data. ("L" when 21.5–40.5MHz)
	12	RBC	I	Reception control signal. "L" : RX
	13	AIPB	O	AIP off voltage (8V).
	14	RFPC	I	Power control voltage.
	15	GND	–	GND.
CN2	1	RDA	I	RF serial data.
	2	RCK	I	RF serial clock.
	3	RLE1	I	RF serial enable 1.
	4	RLE2	I	RF serial enable 2.
	5	RBK	I	RF blanking signal. "H" : Active
	6	NC	–	
	7	NC	–	
	8	TS	I/O	AT-300 control signal. Relay
	9	TT	I/O	AT-300 control signal. Relay
	10	GND	–	GND.
CN3	1	TB0	O	Transmission LPF select. "L" : Active
	2	TB1	O	Transmission LPF select. "L" : Active
	3	TB2	O	Transmission LPF select. "L" : Active
	4	TB3	O	Transmission LPF select. "L" : Active
CN4	1	RL	O	Relay voltage (14V). Relay
	2	14V	O	14V.
	3	GND	–	GND.
CN5	1	TT	I/O	AT-300 control signal. Relay
	2	TS	I/O	AT-300 control signal. Relay
CN6	1	TIF	I	Transmission IF signal (455kHz).
	2	GND	–	GND.
	3	RIF	O	Reception IF signal (455kHz).
	4	GND	–	GND.
CN7	1	LO3	I	Local 3 signal (8.375MHz).
	2	GND	–	GND.
CN8	1	RAT	I	Reception antenna signal.
	2	GND	–	GND.
CN9	Coaxial	DRV	–	Drive signal.
CN10	Coacial	LO1	I	Local 1 signal (VCO).
CN11	Coaxial	LO2	I	Local 2 signal (64.22MHz).
CN501	1	SS	O	Standby switch. "L" : TX. Relay
	2	TXB	I	ON AIR LED (8V when lights).
	3	S0	I	
	4	S1	I	
	5	S2	I	Key matrix.
	6	S3	I	"H" : Not select, "L" : Select
	7	S4	I	
	8	S5	I	
	9	NC	–	
	10	K0	O	
	11	K1	O	
	12	K2	O	
	13	K3	O	Key matrix. "H" : Off, "L" : On
	14	K4	O	
	15	K5	O	
	16	K6	O	
	17	ATL	I	AT TUNE LED (5V when lights).
	18	NC	–	
	19	NC	–	
	20	GND	–	GND.
CN502	1	GND	–	GND.
	2	SS	I	Standby switch. "L" : TX
	3	S5	O	Key matrix. "H" : Not select, "L" : Select
	4	K0	I	Key matrix. "H" : Off, "L" : On
	5	K1	I	Key matrix. "H" : Off, "L" : On
	6	K2	I	Key matirx. "H" : Off, "L" : On
W501	1	SS	O	Standby switch. "L" : TX
	2	GND	–	GND.
	3	MD	O	MIC down switch.
	4	MU	O	MIC up switch.
	5	8M	I	MIC power supply (8V).
	6	MG	–	MIC GND.
	7	MIC	O	MIC signal.
W502	1	GND	–	GND.
	2	SS	O	Standby switch. "L" : TX. Relay

TERMINAL FUNCTION

Connector No.	Terminal No.	Terminal Name	I/O	Terminal Function
	3	S5	I	Key matrix. "H" : Not select, "L" : Select. Relay
	4	K0	O	Key matrix. "H" : Off, "L" : On
	5	K1	O	Key matrix. "H" : Off, "L" : On
	6	K2	O	Key matrix. "H" : Off, "L" : On
FINAL UNIT (X45-3400-XX) : HF 100W				
CN1	Coaxial	HFPO	O	HF final signal.
CN2	1	14VAF	O	AF PA power supply (14V).
	2	14V	O	14V.
	3	14V	O	14V.
	4	8V	O	8V.
	5	5V	O	5V.
	6	8V	O	8V.
	7	GND	–	GND.
	8	GND	–	GND.
CN3	1	5V	O	5V.
	2	8V	O	8V.
	3	GND	O	GND.
CN4	1	HFHG	O	HF final decision.
	2	50HG	O	50MHz final decision. Relay
	3	50B	I	50MHz band power supply (8V when 40.5–60MHz).
	4	TXB	I	Transmission power supply (8V).
	5	PT	O	Protection signal.
CN6	1	GND	–	GND.
	2	14S	O	50MHz 10W power supply (14V).
	3	14S	O	50MHz 10W power supply (14V).
	4	50T	O	50MHz transmission power supply (8V).
CN7	Coaxial	50D	O	50MHz drive signal.
CN8	1	M+	O	Fan motor drive +.
	2	M–	O	Fan motor drive –.
CN9	1	M+	O	Fan motor drive +.
	2	M–	O	Fan motor drive –.
W1	Coaxial	DRV	I	Drive signal.
W2	1	14	I	External power supply (14V).
	2	GND	–	GND.
	3	NC	–	
	4	14	I	External power supply (14V).
	5	GND	–	GND.
	6	NC	–	
W3		14S	O	AT-300 power supply (14V).
W4	1	14	O	50MHz 50W power supply (14V).
	2	GND	–	GND.
W5	1	14S	I	Power switch (14V).
	2	14	O	Power switch (14V).
W6	1	50T	O	50MHz 50W transmission power supply (8V).
	2	50PT	I	50MHz protection signal.
	3	14S	O	50MHz 50W power supply.
	4	50HG	I	50MHz final decision signal. Relay
FINAL UNIT (X45-3420-00) : 50MHz 10W				
CN1	Coaxial	50D	I	50MHz drive signal.
CN2	Coaxial	10WPO	O	50MHz 10W final signal.
CN3	1	GND	–	GND.
	2	14S	I	50MHz 10W power supply (14V).
	3	14S	I	50MHz 10W power supply (14V).
	4	50T	I	50MHz transmission power supply (8V).

Connector No.	Terminal No.	Terminal Name	I/O	Terminal Function
FINAL UNIT (X45-3430-00) : 50MHz 50W				
CN1	Coaxial	50WD	I	50MHz drive signal.
CN2	1	50HG	O	50MHz final decision signal.
	2	50PT	O	50MHz protection signal.
	3	50T	I	50MHz 50W transmission power supply (8V).
	4	14S	I	50MHz 50W power supply (14V).
CN3	1	M+	O	Fan motor drive +.
	2	M–	O	Fan motor drive –.
W1	Coaxial	50WPO	O	50MHz 50W final signal.
W2	1	14	I	50MHz 50W power supply (14V).
	2	GND	–	GND.
DIGITAL UNIT (X46-312X-XX)				
CN1	1	GND	–	GND.
	2	LBL	O	LCD all light off. "L" : All light off, "H" : Display on
	3	NC	–	
	4	LLE2	O	LCD enable 2.
	5	LLE1	O	LCD enable 1.
	6	LCK	O	LCD clock.
	7	LDA	O	LCD data.
	8	LLE3	O	IF filter LED enable 3.
	9	8V	O	8V. Relay
	10	5V	O	5V.
CN2	1	GND	–	GND.
	2	IFS	I	IF shift volume voltage.
	3	IFB	O	IF shift reference voltage (5V).
	4	RIT	I	RIT volume voltage.
	5	RIB	O	RIT reference voltage (5V).
CN3	1	MU	I	MIC up switch.
	2	MD	I	MIC down switch.
CN4	1	FDA	O	IF serial data.
	2	FCK	O	IF serial clock.
	3	FLE1	O	IF serial enable 1.
	4	FLE2	O	IF serial enable 2.
	5	TOB	O	Tone unit control voltage.
	6	LIN	O	Linear standby relay control signal. "H" : Active
	7	ABK	O	AF blanking signal. "H" : Active
	8	TXI	O	Transmission band data. "L" : Active
	9	CSS	I	Standby for microprocessor. "L" : TX
	10	SS	O	Standby switch. "L" : TX
	11	TXB	I	ON AIR LED (8V when lights). Relay
	12	50HG	I	50MHz final decision voltage.
	13	HFHG	I	HF final decision voltage.
	14	RFM	I	Power meter signal.
	15	ALDB	I	Audio volume meter signal, ALC meter signal.
	16	REV	I	Reflector meter signal.
	17	SM	I	S-meter signal.
	18	DBC	I	DSP connection voltage. "L" : DSP install
	19	NC	–	
	20	GND	–	GND.
CN5	1	VB0	O	VCO band data 0.
	2	VB1	O	VCO band data 1.
	3	VB2	O	VCO band data 2.
	4	VB3	O	VCO band data 3.
	5	PLE1	O	PLL enable 1.
	6	PCK	O	PLL clock.
	7	PLE2	O	PLL enable 2.
	8	PDA	O	PLL data.

TERMINAL FUNCTION

Connector No.	Terminal No.	Terminal Name	I/O	Terminal Function
	9	BCH	O	PLL band-pass changeover.
	10	UL	I	PLL unlock data. "L" : Unlock
	11	14V	O	14V. Relay
	12	GND	–	GND.
CN6	1	CDA	O	CAR DDS data.
	2	CCK	O	CAR DDS clock.
	3	CLE1	O	CAR DDS enable 1.
	4	ABSL	O	DDS channel A/B changeover.
	5	CLE2	O	CAR DDS enable 2.
	6	CASL	O	DDS channel A/B changeover.
	7	NC	–	
	8	GND	–	GND.
CN7	1	GND	–	GND.
	2	5V	I	5V.
	3	8V	I	8V. Relay
	4	14V	I	14V. Relay
CN8	1	5S	O	5V.
	2	CK1	I	Main encoder pulse 1 signal.
	3	CK2	I	Main encoder pulse 2 signal.
	4	GND	–	GND.
CN9	1	POD1	I	Variable condenser position recognition signal 1.
	2	POD2	I	Variable condenser position recognition signal 2.
	3	VREF	O	AT reference voltage (5V).
	4	ATG	–	AT GND.
	5	PR22	O	Motor rotate direction control 4.
	6	PR21	O	Motor rotate direction control 3.
	7	PR12	O	Motor rotate direction control 2.
	8	PR11	O	Motor rotate direction control 1.
	9	ATA	O	AUTO/THRU switch. "H" : AUTO, "L" : THRU
	10	APRE	O	Preset control changeover. "H" : Auto, "L" : Preset
	11	SPED	O	Motor speed control. "H" : Go, "L" : Stop
	12	AT1	I	Preset AT install. "L" : Install
	13	14V	O	14V. Relay
	14	5V	O	5V.
	15	GND	–	GND.
	16	GND	–	GND.
CN10	1	GND	–	GND.
	2	5C	O	5V.
	3	STR	O	VS-2 voice start. "H" : Start
	4	BSY	O	VS-2 busy. "H" : Voice synthesize signal out
	5	SCK	O	VS-2 voice clock.
	6	SD	O	VS-2 voice data.
CN11	1	RDA	O	RF serial data.
	2	RCK	O	RF serial clock.
	3	RLE1	O	RF serial enable 1.
	4	RLE2	O	RF serial enable 2.
	5	RBK	O	RF blanking signal. "H" : Active
	6	NC	–	
	7	NC	–	
	8	TS	I/O	AT-300 control signal.
	9	TT	I/O	AT-300 control signal.
	10	GND	–	GND.
CN12	1	CK3	I	Sub encoder pulse 3 signal.
	2	CK4	I	Sub encoder pulse 4 signal.
	3	GND	–	GND.

Connector No.	Terminal No.	Terminal Name	I/O	Terminal Function
CN13	1	GND	–	GND.
	2	NC	–	
	3	NC	–	
	4	ATL	O	AT TUNE LED (5V when lights).
	5	K6	I	Key matrix. "H" : Off, "L" : On
	6	K5	I	Key matrix. "H" : Off, "L" : On
	7	K4	I	Key matrix. "H" : Off, "L" : On
	8	K3	I	Key matrix. "H" : Off, "L" : On
	9	K2	I	Key matrix. "H" : Off, "L" : On
	10	K1	I	Key matrix. "H" : Off, "L" : On
	11	K0	I	Key matrix. "H" : Off, "L" : On
	12	NC	–	
	13	S5	O	
	14	S4	O	
	15	S3	O	Key matrix.
	16	S2	O	"H" : Not select, "L" : Select
	17	S1	O	
	18	S0	O	
	19	TXB	O	ON AIR LED (8V when lights). Relay
	20	SS	I	Standby switch. "L" : TX
CN14	1	BZ	O	Buzzer signal.
	2	GND	–	Buzzer signal GND.
IF UNIT (X48-3090-XX)				
CN1	1	14V	O	14V.
	2	8V	O	8V.
	3	RL	O	Relay power supply (14V).
	4	TXB	O	Transmission power supply (8V).
	5	RXB	O	Reception power supply (8V).
	6	AGC	O	AGC voltage (2.8V when full gain).
	7	ALC	O	ALC voltage (3.0V when full gain).
	8	50MC	I	50MHz band data. "L" when 40.5~60MHz
	9	AMB	O	AM mode voltage (8V).
	10	CKY	O	Keying control signal.
	11	28MC	I	28MHz band data. "L" when 21.5~40.5MHz
	12	RBC	O	Receive control signal. "L" : RX
	13	AIPB	I	AIP off voltage (8V).
	14	RFPC	O	Power control voltage.
	15	GND	–	GND.
CN2	1	CAR	I	CAR signal (455kHz).
	2	GND	–	GND.
CN3	1	FMM	O	FM modulation signal.
	2	GND	–	GND.
CN4	1	MIC VR2	I	MIC volume signal 2.
	2	GND	–	GND.
	3	MIC VR1	O	MIC volume signal 1.
	4	GND	–	GND.
	5	TXB	O	Transmission power supply (8V).
	6	CV	I	Carrier volume voltage.
CN5	1	14VAF	I	AF PA power supply (14V).
	2	14V	I	14V.
	3	8V	I	8V.
	4	TXB	O	Transmission power supply (8V).
	5	50B	O	50MHz band power supply. 8V when 40.5~60MHz
	6	HFHG	I	HF final decision voltage. Relay
	7	50HG	I	50MHz final decision voltage. Relay
	8	PT	I	Protection signal.
	9	GND	–	GND.
CN6	1	SS	I	Standby switch. "L" : TX
	2	8M	O	MIC power supply (8V).

TERMINAL FUNCTION

Connector No.	Terminal No.	Terminal Name	I/O	Terminal Function
	3	GND	–	GND.
	4	MIC	I	MIC signal.
	5	MG	–	MIC GND.
CN7	1	FDA	I	IF serial data.
	2	FCK	I	IF serial clock.
	3	FLE1	I	IF serial enable 1.
	4	FLE2	I	IF serial enable 2.
	5	TOB	I	Tone unit control voltage.
	6	LIN	I	Linear standby relay control signal. "H" : Active
	7	ABK	I	AF blanking signal. "H" : Active
	8	TXI	I	Transmission band data. "L" : Active
	9	CSS	O	Standby for macroprocessor. "L" : TX
	10	SS	I	Standby switch. "L" : TX
	11	TXB	O	ON AIR LED (8V when lights).
	12	50HG	O	50MHz final decision voltage. Relay
	13	HFHG	O	HF final decision voltage. Relay
	14	RFM	O	Power meter signal.
	15	ALDB	O	Volume meter signal, ALC meter signal.
	16	REV	O	Reflected wave meter signal.
	17	SM	O	S-meter signal.
	18	DBC	O	DSP connection voltage. "L" : Install
	19	NC	–	
	20	GND	–	GND.
CN8	1	PC1	O	Power control volume voltage 1.
	2	PC2	I	Power control volume voltage 2.
	3	GND	–	GND.
	4	VSR	I	Reflected wave voltage.
CN9	1	DVR1	O	Delay volume voltage 1.
	2	DVR2	I	Delay volume voltage 2.
CN10	1	RTK	O	RTTY keying signal.
	2	10K	I	DSP reference frequency.
	3	10G	–	DSP reference frequency GND.
	4	GND	–	GND.
	5	RFG1	O	RF GAIN volume voltage 1.
	6	RFG2	I	RF GAIN volume voltage 2.
CN11	1	AV2	I	AF volume signal 2.
	2	GND	–	GND.
	3	BZ	I	Buzzer signal.
	4	NC	–	
CN12	1	SP	O	Speaker signal.
	2	GND	–	GND.
CN13	1	SPK	O	Phone jack speaker signal.
	2	PH2	I	Phone jack speaker signal. (Off when phone install)
	3	PH3	–	Phone jack GND.
CN14	1	VO	I	VS-2 voice signal.
	2	GND	–	GND.
CN15	1	AV1	O	AF volume signal 1.
	2	GND	–	GND.
CN16	1	NTR	O	Notch volume voltage.
	2	NTG	I	Notch volume GND.
	3	FM SQ1	O	Squelch volume voltage 1 (FM).
	4	FM SQ2	I	Squelch volume votage 2 (FM).
	5	NFM SQ1	O	Squelch volume voltage 1 (except FM).
	6	NFM SQ2	I	Squelch volume voltage 2 (except FM).
W1	1	GND	–	GND.
	2	RIF	I	Receive IF signal (455kHz).
	3	GND	–	GND.
	4	TIF	O	Transmission IF signal (455kHz).
W3	1	TOB	O	Tone unit control voltage.
	2	TON	I	Sub tone signal.
	3	GND	–	GND.
PLL UNIT (X50-3150-XX)				
CN1	1	10K	O	DSP reference frequency.
	2	10G	–	DSP reference frequency GND.
CN2	1	VB0	I	VCO band data 0.
	2	VB1	I	VCO band data 1.
	3	VB2	I	VCO band data 2.
	4	VB3	I	VCO band data 3.
	5	PLE1	I	PLL enable 1.
	6	PCK	I	PLL clock.
	7	PLE2	I	PLL enable 2.
	8	PDA	I	PLL data.
	9	BCH	I	PLL band-pass select.
	10	UL	O	PLL unlock data. "L" : Unlock
	11	14V	I	14V.
	12	GND	–	GND.
CN3	Coaxial	LO1	O	Local 1 signal (VCO).
CN4	Coaxial	LO2	O	Local 2 signal (64.22MHz).
CN5	1	FMM	I	FM modulation signal.
	2	GND	–	GND.
CN6	Coaxial	20M	O	20MHz reference frequency.
CN7	Coaxial	DLO	I	DDS local signal.
CN8	1	8V	I	8V.
	2	5V	I	5V.
	3	GND	–	GND.
CAR UNIT (X50-3160-00)				
CN1	1	CAR	O	CAR signal (455kHz).
	2	GND	–	GND.
	3	RTK	I	RTTY keying signal.
	4	GND	–	GND.
CN2	Coaxial	20M	I	20MHz reference frequency.
CN3	1	LO3	O	Local 3 signal (8.375MHz).
	2	GND	–	GND.
CN4	Coaxial	DLO	O	DDS local signal.
CN5	1	8V	O	8V.
	2	5V	O	5V.
	3	GND	–	GND.
	4	NC	–	
CN6	1	8V	I	8V.
	2	5V	I	5V.
	3	GND	–	GND.
CN7	1	CDA	I	CAR DDS data.
	2	CCK	I	CAR DDS clock.
	3	CLE1	I	CAR DDS enable 1.
	4	ABSL	I	DDS channel A/B select.
	5	CLE2	I	CAR DDS enable 2.
	6	CASL	I	DDS channel A/B select.
	7	NC	–	
	8	GND	–	GND.
FILTER UNIT (X51-3110-XX)				
CN1	Coaxial	HFPO	I	HF final signal.
CN2	Coaxial	50MPO	I	50MHz final signal.
CN3	Coaxial	AT1	O	AT signal 1.
CN4	Coaxial	AT2	I	AT signal 2.
CN5	1	RAT	O	receive antenna signal.
	2	GND	–	GND.

TERMINAL FUNCTION

Connector No.	Terminal No.	Terminal Name	I/O	Terminal Function
CN6	1	14V	I	14V.
	2	TB0	I	Transmission LPF select data. "L" : Active
	3	TB1	I	Transmission LPF select data. "L" : Active
	4	TB2	I	Transmission LPF select data. "L" : Active
	5	TB3	I	Transmission LPF select data. "L" : Active
	6	RL	I	Relay power supply (14V).
	7	GND	–	GND.
CN7	1	TS	I/O	AT-300 control signal.
	2	TT	I/O	AT-300 control signal.
CN8	1	VSR	O	Reflected wave voltage.
	2	GND	–	GND.
	3	GND	–	GND.
	4	VSF	O	Forward wave voltage.
CN9	1	28A	O	AT band data. 25~30MHz
	2	14A	O	AT band data. 10.5~14.5MHz
	3	25A	O	AT band data. 21.5~25MHz
	4	21A	O	AT band data. 14.5~21.5MHz
	5	7A	O	AT band data. 4~7.5MHz
	6	10A	O	AT band data. 7.5~10.5MHz
	7	GND	–	GND.
W1		ANT1	O	ANT1.
W2		ANT2	O	ANT2. Only 50MHz when S1 changeover. (TS-690S only)
W3		14S	I	AT-300 power supply (14V).
W4	1	GND	–	GND.
	2	TT	I/O	AT-300 control signal.
	3	GND	–	GND.
	4	NC	–	
	5	TS	I/O	AT-300 control signal.
	6	14S	O	AT-300 power supply (14V).
W7		GND	–	ANT1 GND.
W8		GND	–	ANT2 GND.
AT UNIT (X53-3370-00)				
CN1	Coaxial	ATD1	I	AT variable condenser 1.
CN2	Coaxial	ATD2	O	AT variable condenser 2.
CN3	1	POD1	O	Variable condenser position detection signal 1. Relay
	2	POD2	O	Variable condenser position detection signal 2. Relay
	3	VREF	I	AT reference voltage (5V). Relay
	4	ATG	–	AT GND.
	5	PR22	I	Motor rotate direction control 4.
	6	PR21	I	Motor rotate direction control 3.
	7	PR12	I	Motor rotate direction control 2.
	8	PR11	I	Motor rotate direction control 1.
	9	ATA	I	AUTO/THRU switch. "H" : AUTO, "L" : THRU
	10	APRE	I	Preset control select. "H" : Auto, "L" : Preset
	11	SPED	I	Motor speed control. "H" : Go, "L" : Stop
	12	AT1	O	Preset AT install. "L" : Install
	13	14V	I	14V.
	14	5V	I	5V.
	15	GND	–	GND.
	16	GND	–	GND.
CN4	1	M2–	O	Motor drive 2 –.
	2	M2+	O	Motor drive 2 +.
	3	M1+	O	Motor drive 1 +.
	4	M1–	O	Motor drive 1 –.
	5	POD2	I	Variable condenser position detection 2. Relay
	6	VREF	O	AT reference voltage (5V). Relay
	7	POD1	I	Variable condenser position detection 1. Relay
	8	GND	–	GND.
W1	Coaxial	AT1	I	AT signal 1.
W2	Coaxial	AT2	O	AT signal 2.
W101	Coaxial	ATD1	O	AT variable condenser 1.
W102	Coaxial	ATD2	I	AT variable condenser 2.
W103	1	28A	I	AT band data. 25~30MHz
	2	25A	I	AT band data. 21.5~25MHz
	3	21A	I	AT band data. 14.5~21.5MHz
	4	14A	I	AT band data. 10.5~14.5MHz
	5	10A	I	AT band data. 7.5~10.5MHz
	6	7A	I	AT band data. 4~7.5MHz
	7	GND	–	GND.
W104	1	GND	–	GND.
	2	POD1	O	Variable condenser position detection 1.
	3	VREF	I	AT reference voltage (5V).
	4	POD2	O	Variable condenser position detection 2.
W105	1	M2+	I	Motor drive 2 +.
	2	M2–	I	Motor drive 2 –.
W106	1	M1–	I	Motor drive 1 –.
	2	NC	–	
	3	M1+	I	Motor drive 1 +.

TS-450S/690S PC BOARD VIEWS

RF UNIT (X44-3130-XX) -00 : TS-690S -01 : TS-450S Component side view

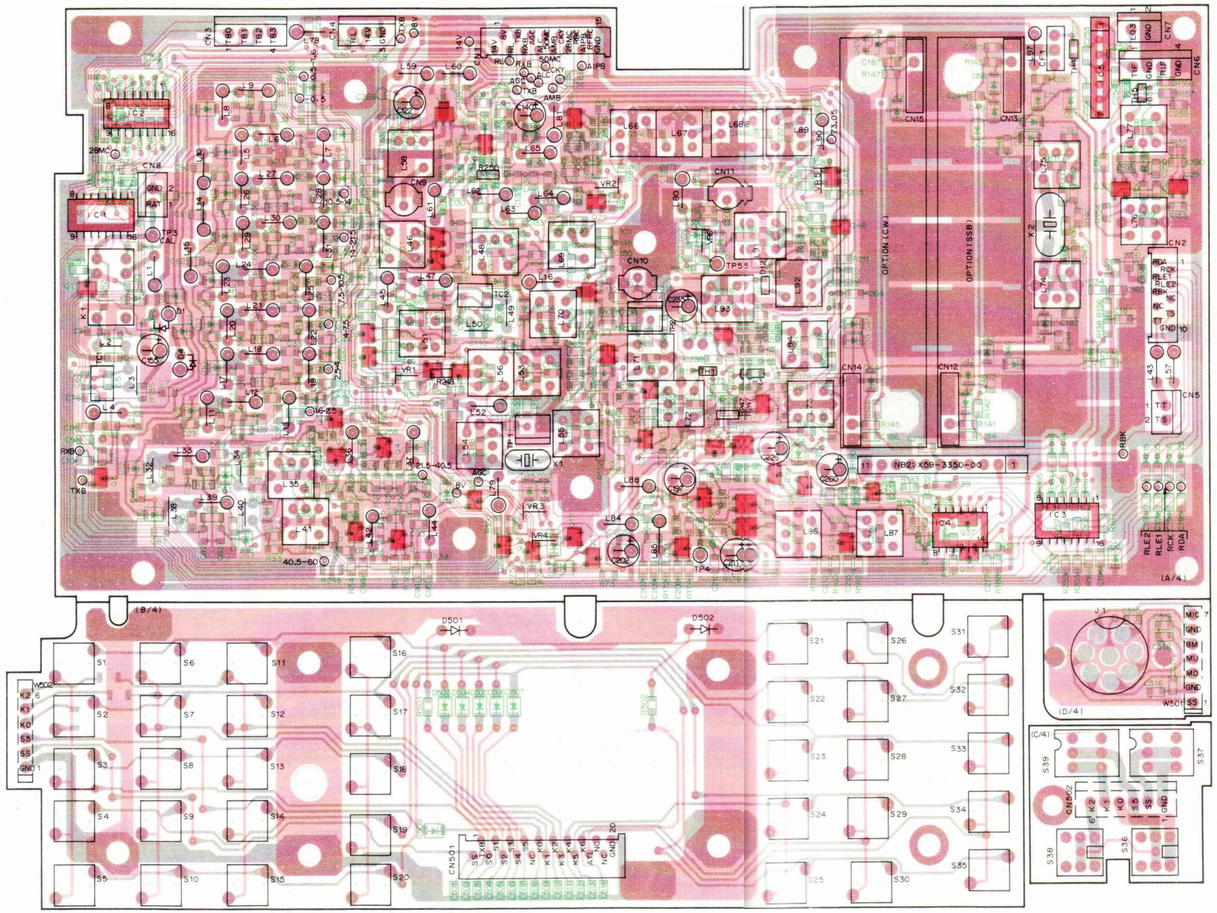

RF UNIT (X44-3130-XX) -00 : TS-690S -01 : TS-450S Foil side view

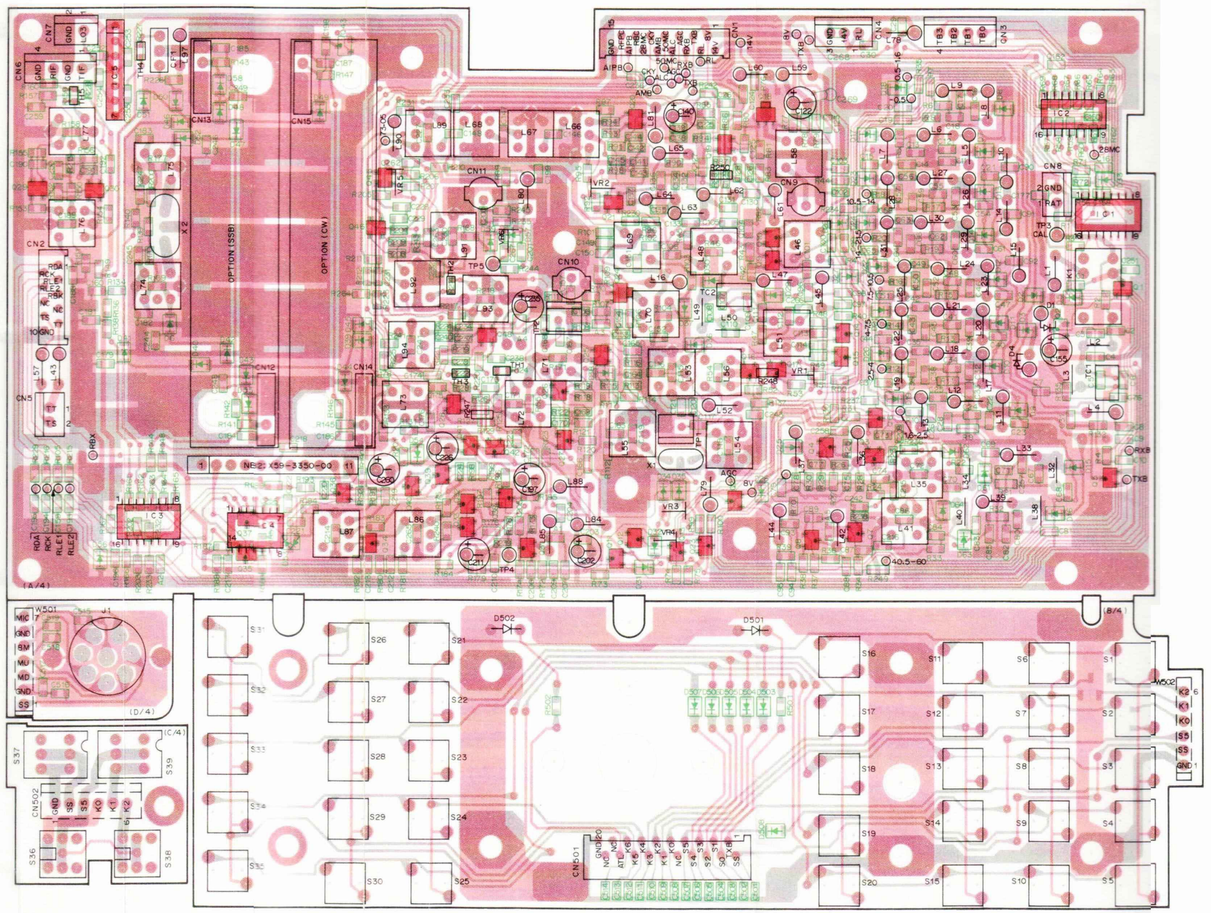

RF UNIT (X44-3130-01) : TS-450S

NB (X59-3350-00) Component side view

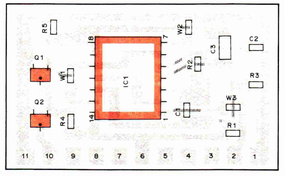

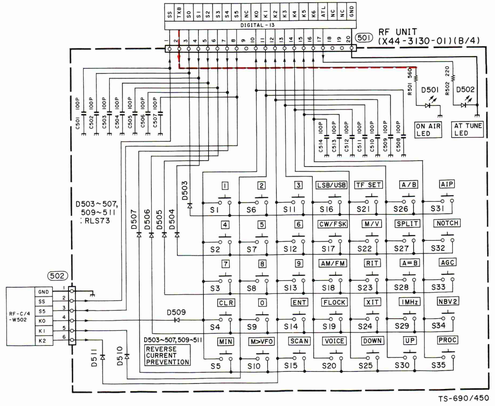

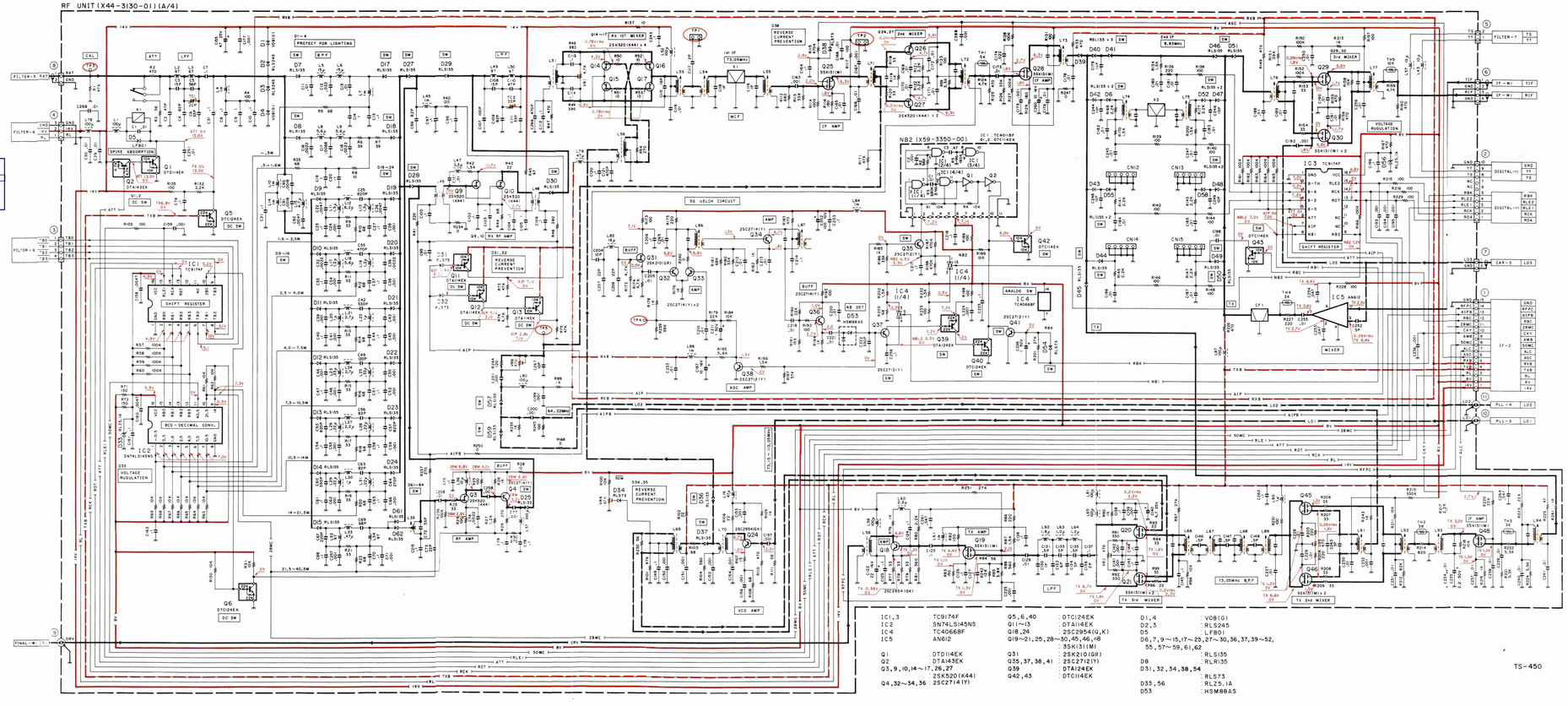

IC1,3	: TC9174F	Q5,6,40	: DTC124EK	D1,4	: V08(G)
IC2	: SN74LS145NS	Q11~13	: DTA114EK	D2,3	: RLS245
IC4	: TC4066BF	Q18,24	: 2SC2954(Q,K)	D5	: LFB01
IC5	: AN612	Q19~21,25,28~30,45,46,48	: 3SK131(M)	D6,7,9~15,17~25,27~30,36,37,39~52, 55,57~59,61,62	: RLS135
Q1	: DTD114EK	Q31	: 2SK210(GR)	D8	: RLR135
Q2	: DTA143EK	Q35,37,38,41	: 2SC2712(Y)	D31,32,34,38,54	: RLS73
Q3,9,10,14~17,26,27	: 2SK520(K44)	Q39	: DTA124EK	D33,56	: RLR5.1A
Q4,32~34,36	: 2SC2714(Y)	Q42,43	: DTC114EK	D53	: HSM88AS

TS-690S CIRCUIT DIAGRAM

TC9174F

2SK520

SN74LS145NS

2SC2954

AN612

TC4066BF
TC4011BF

DTD114EK
DTA143EK
DTC114EK
DTA124EK
DTC124EK
2SC2714
2SC2712

2SK210

3SK131

RF UNIT (X44-3130-00)(B/4)

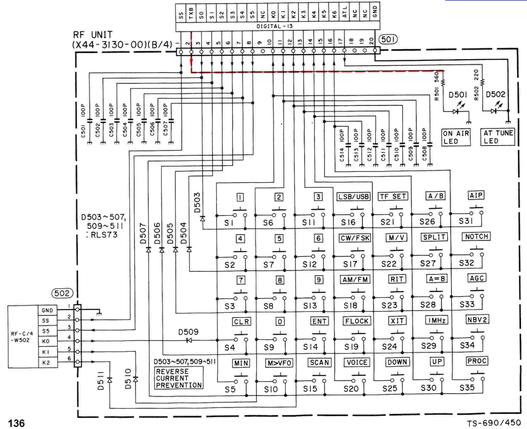

136

TS-690/450

RF UNIT (X44-3130-00) : TS-690S

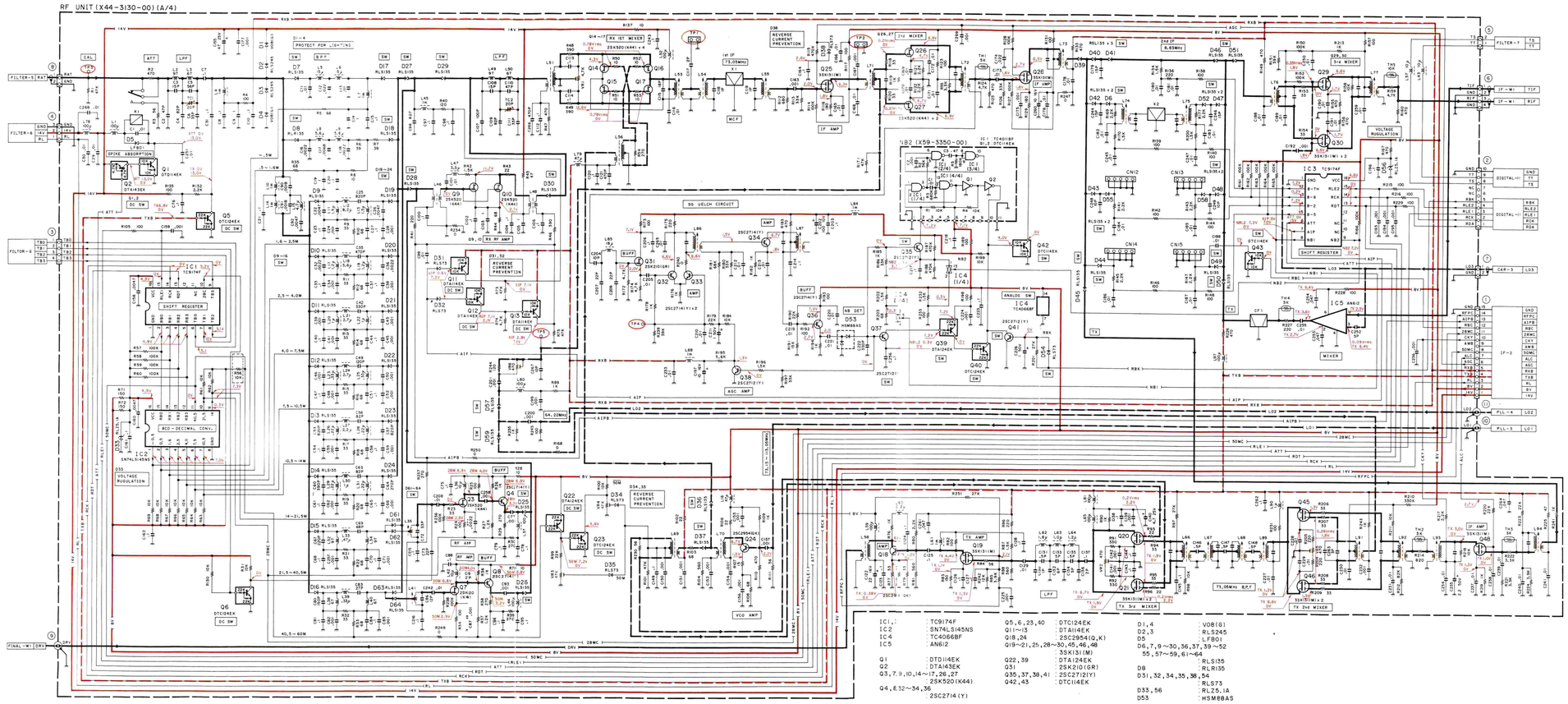

IC1	: TC9174F	Q5,6,23,40	: DTC124EK	D1,4	: V08(G)
IC2	: SN74LS145NS	Q11~13	: DTA114EK	D2,3	: RLS245
IC4	: TC4066BF	Q18,24	: 2SC2954(O,K)	D5	: LFB01
IC5	: AN612	Q19~21,25,28~30,45,46,48	: 3SK131(M)	D6,7,9~30,36,37,39~52 55,57~59,61~64	: RLS135
Q1	: DTD114EK	Q22,39	: DTA124EK	D8	: RLR135
Q2	: DTA143EK	Q31	: 2SK210(GR)	D31,32,34,35,38,54	: RLS73
Q3,7,9,10,14~17,26,27	: 2SK520(K44)	Q35,37,38,41	: 2SC2712(Y)	D33,56	: RLZ5.1A
Q4,8,32~34,36	: 2SC2714(Y)	Q42,43	: DTC114EK	D53	: HSM88AS

HF 100W FINAL UNIT (X45-3400-XX) Component side view
-00 : TS-690S -01 : TS-450S

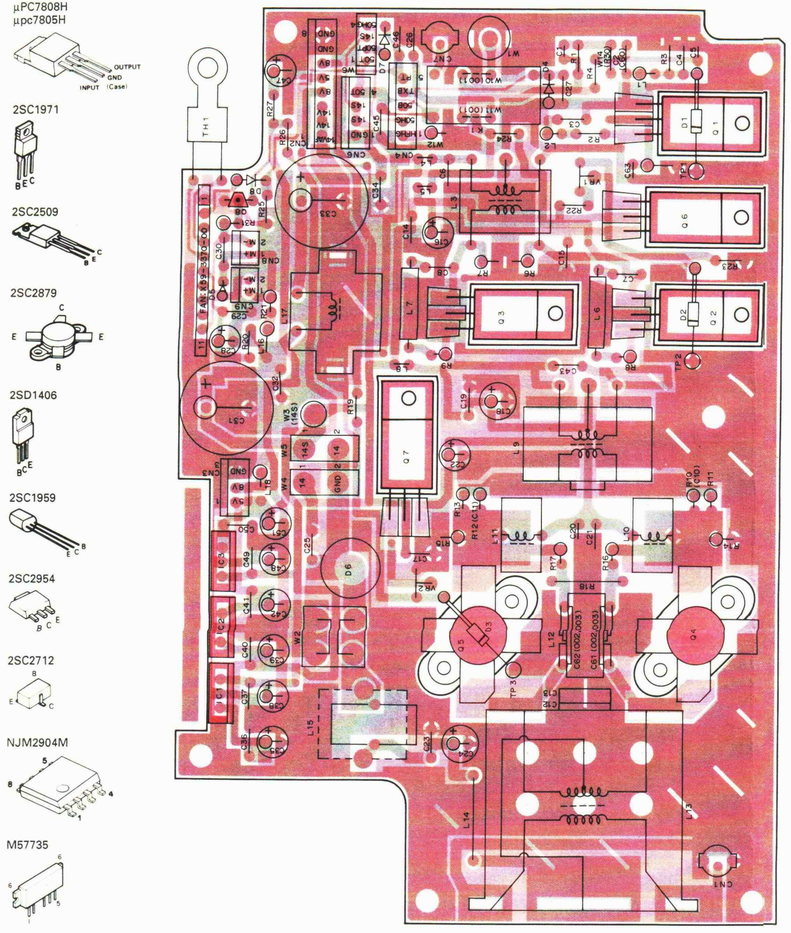

HF 100W FINAL UNIT (X45-3400-01) : TS-450S

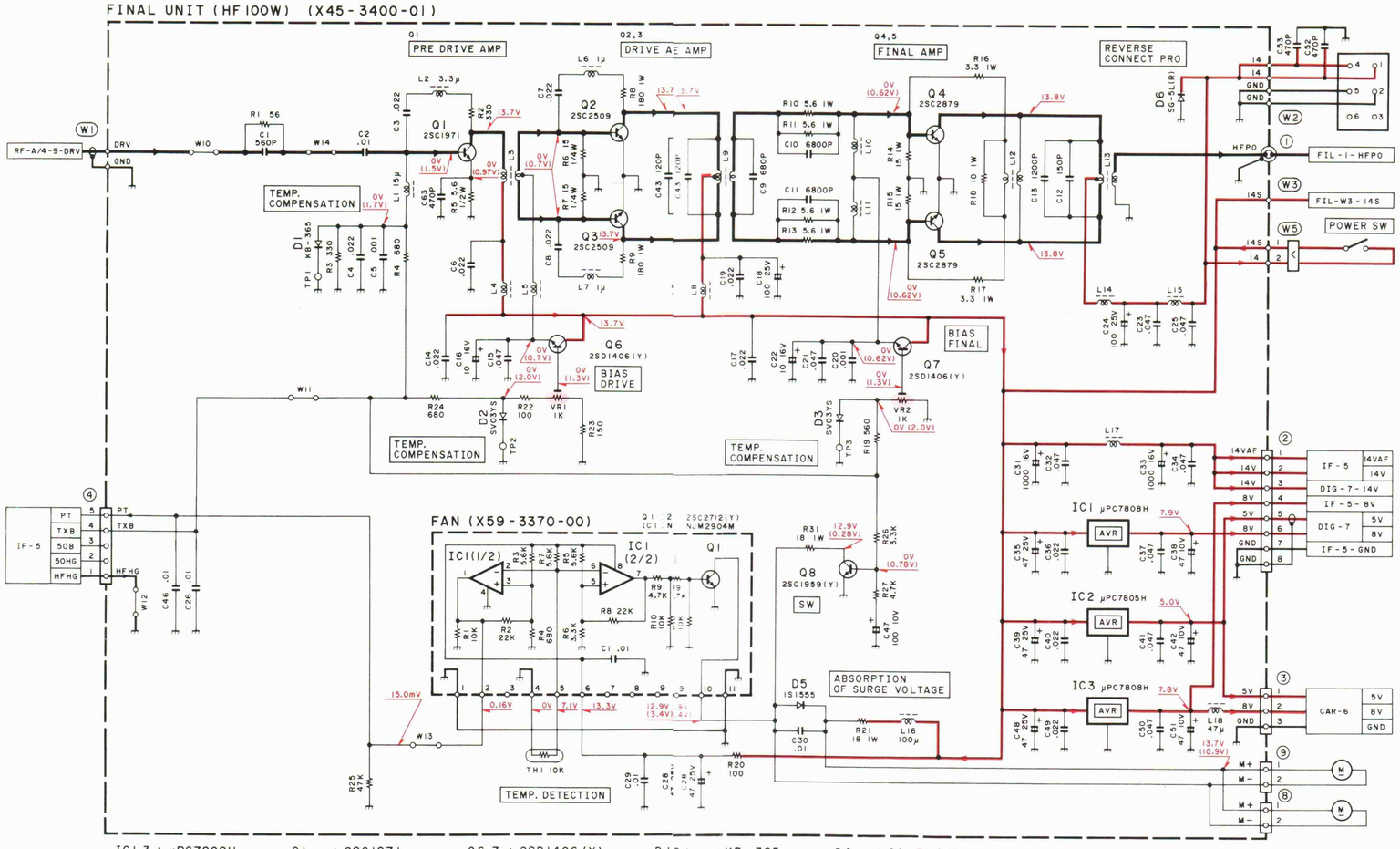

IC1,3 : μPC7808H
IC2 : μPC7805H
Q1 : 2SC1971
Q2,3 : 2SC2509
Q4,5 : 2SC2879
Q6,7 : 2SD1406(Y)
Q8 : 2SC1959(Y)
D1D1 : KB-365
D2D2,3 : SV03YS
D5D5 : 1S1555
D6 : SG-5L(R)

TS-690S CIRCUIT DIAGRAM / PC BOARD VIEWS

HF 100W FINAL UNIT (X45-3400-00) : TS-690S

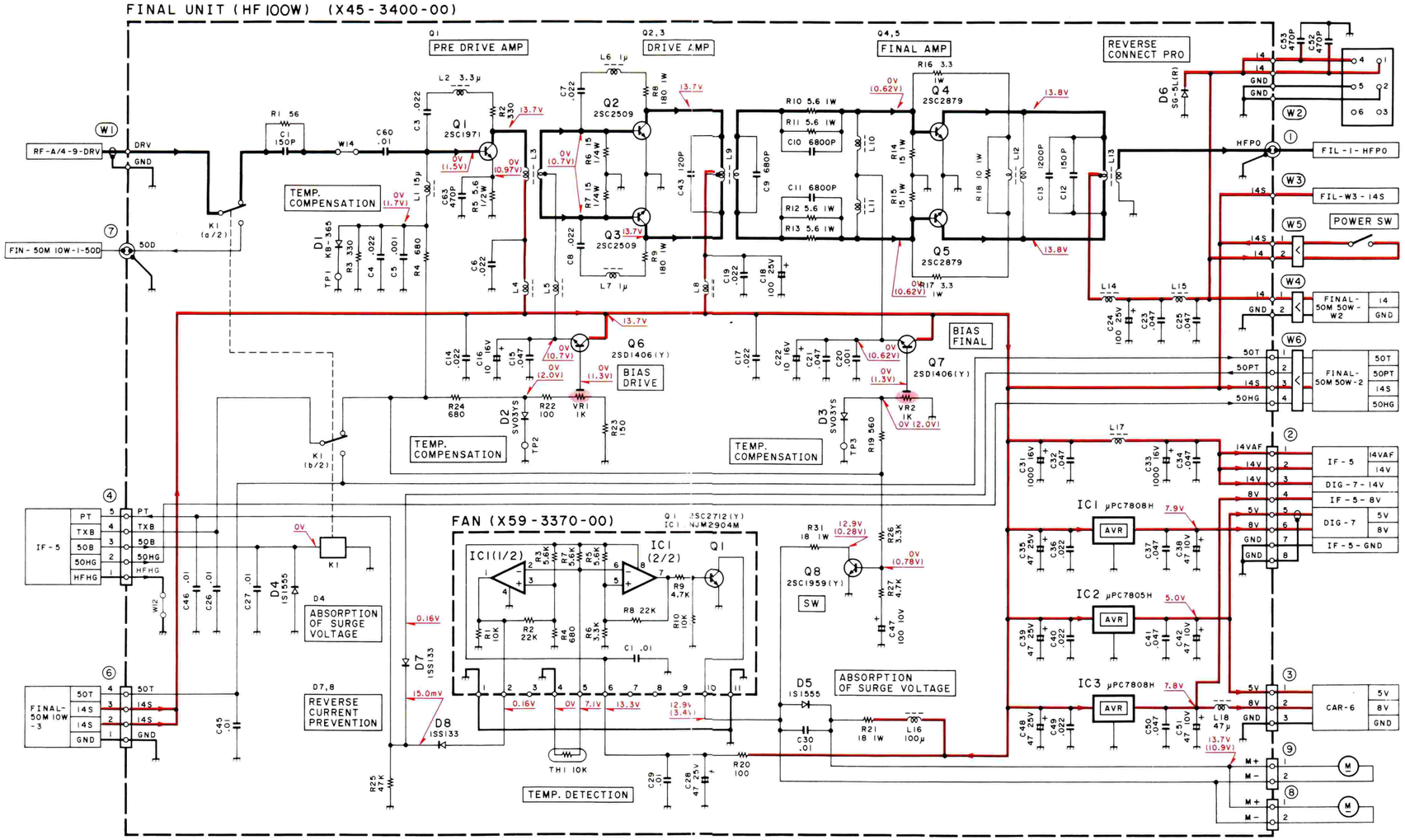

IC1,3 : μPC7808H
IC2 : μPC7805H

Q1 : 2SC1971
Q2,3 : 2SC2509
Q4,5 : 2SC2879

Q6,7 : 2SD1406(Y)
Q8 : 2SC1959(Y)

D : KB-365
D2,3 : SV03YS
D4,5 : IS1555

D6 : SG-5L(R)
D7,8 : ISS133

TS-690S(K)
TS-690S(J)

50MHz 10W FINAL UNIT (X45-3420-00)
Component side view : TS-690S

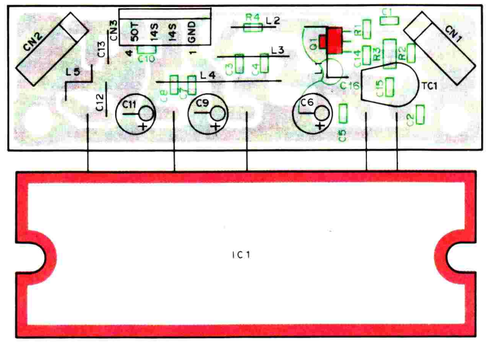

50MHz 10W FINAL UNIT (X45-3420-00)
Foil side view : TS-690S

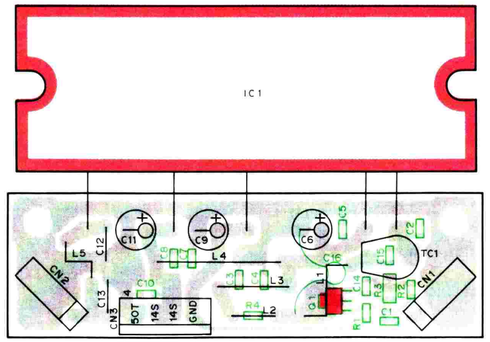

50MHz 50W FINAL UNIT (X45-3430-00)
Component side view : TS-690S

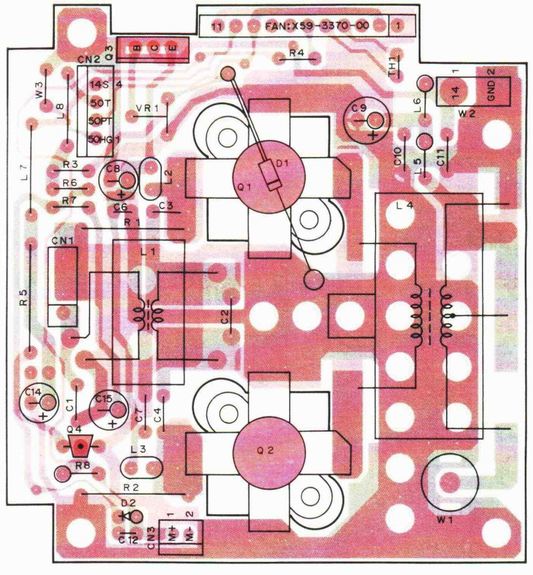

FAN (X59-3370-00) Component side view

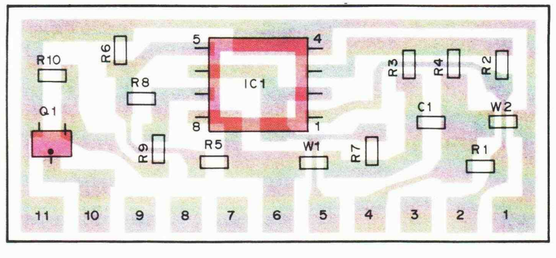

50MHz 10W FINAL UNIT (X45-3420-00) : TS-690S

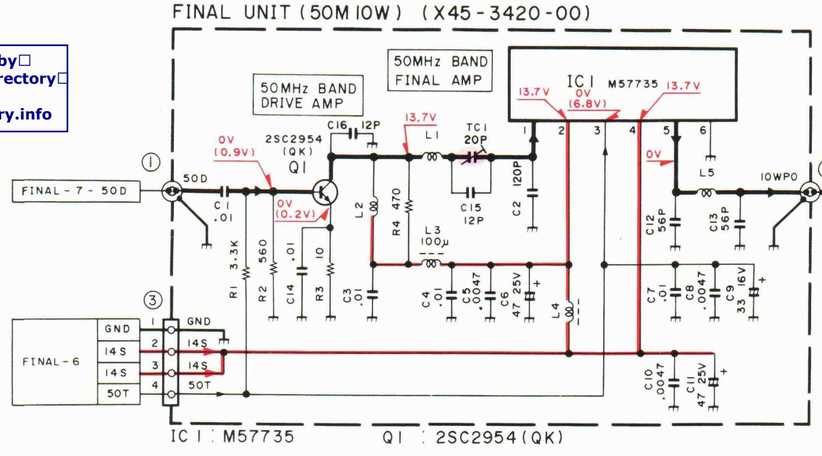

50MHz 50W FINAL UNIT (X45-3430-00) : TS-690S

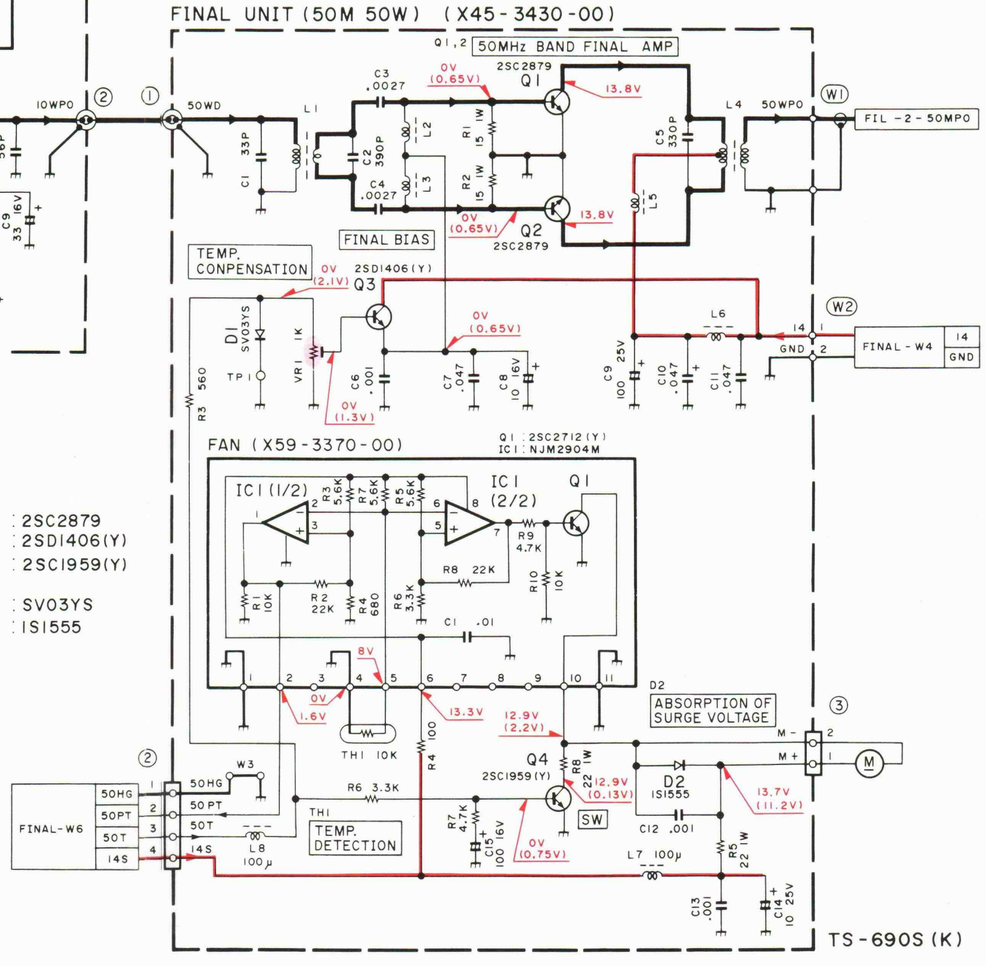

TS-690S (K)

TS-450S/690S PC BOARD VIEWS

DIGITAL UNIT (X46-312X-XX) Component side view

0-11 : TS-690S (K,P) 0-12 : TS-450S (K,P) 0-21 : TS-690S (X,M) 0-22 : TS-450S (X,M)
0-23 : TS-450S (M2) 2-71 : TS-690S (E) 2-72 : TS-450S (E) 2-73 : TS-690S (E2) 2-74 : TS-450S (E2)

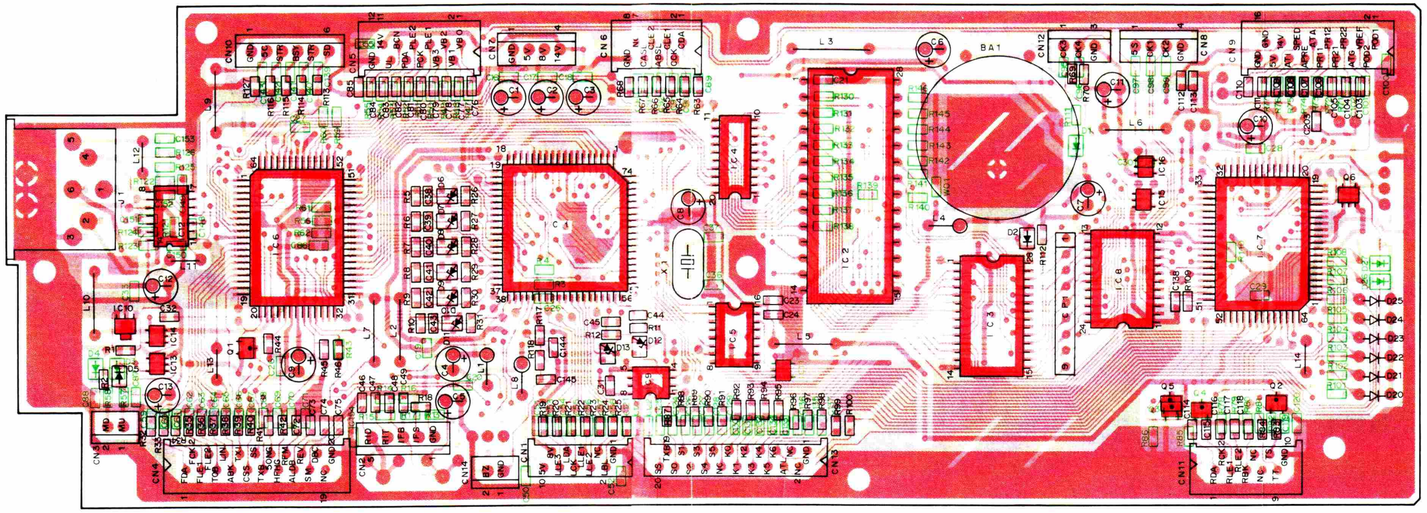

DIGITAL UNIT (X46-312X-XX) Foil side view

0-11 : TS-690S (K,P) 0-12 : TS-450S (K,P) 0-21 : TS-690S (X,M) 0-22 : TS-450S (X,M)
0-23 : TS-450S (M2) 2-71 : TS-690S (E) 2-72 : TS-450S (E) 2-73 : TS-690S (E2) 2-74 : TS-450S (E2)

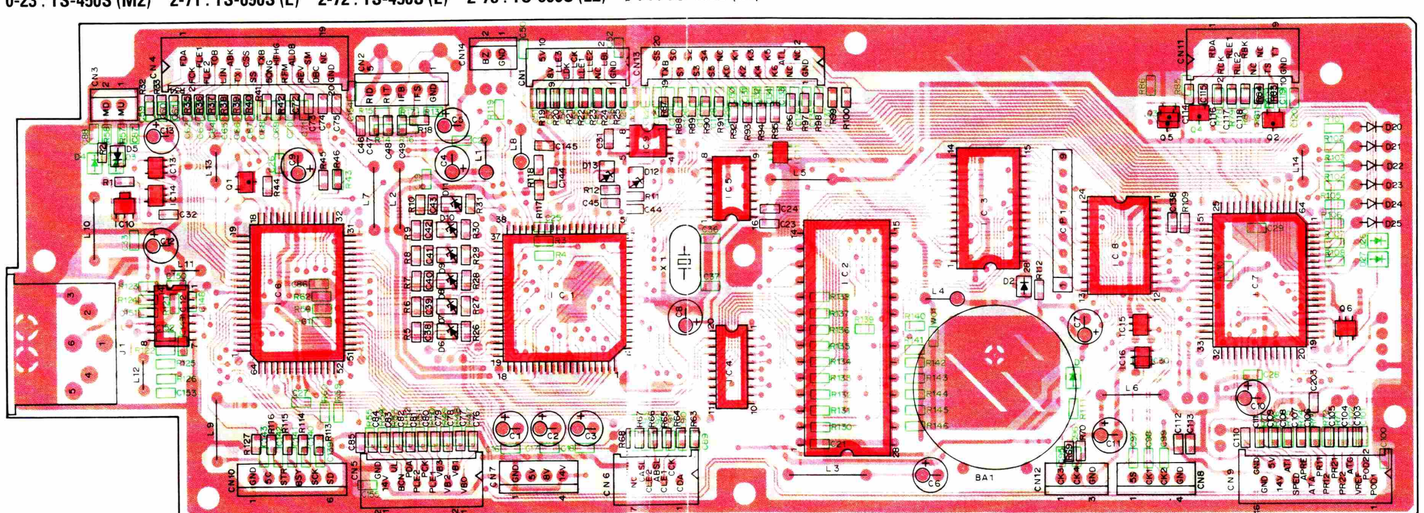

TC74HC573AF

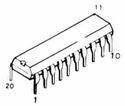

CAT35C104KI

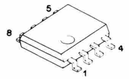

TC74HC138AF

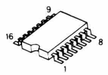

CXD1095Q

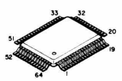

LC3564PML-12

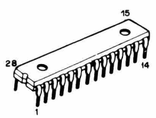

LZ92K371

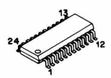

M51951BML

µPD78213GJ-5BJ

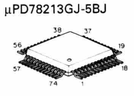

SN74AS04NS

DTC124EK
DTC143EK

TC4S584F
TC7S08F

FMC3

DIGITAL UNIT (X46-312X-XX) : TS-450S
0-12 : TS-450S (K,P) 0-22 : TS-450S (X,M) 0-23 : TS-450S (M2) 2-72 : TS-450S (E) 2-74 : TS-450S (E2)

CIRCUIT DIAGRAM TS-450S

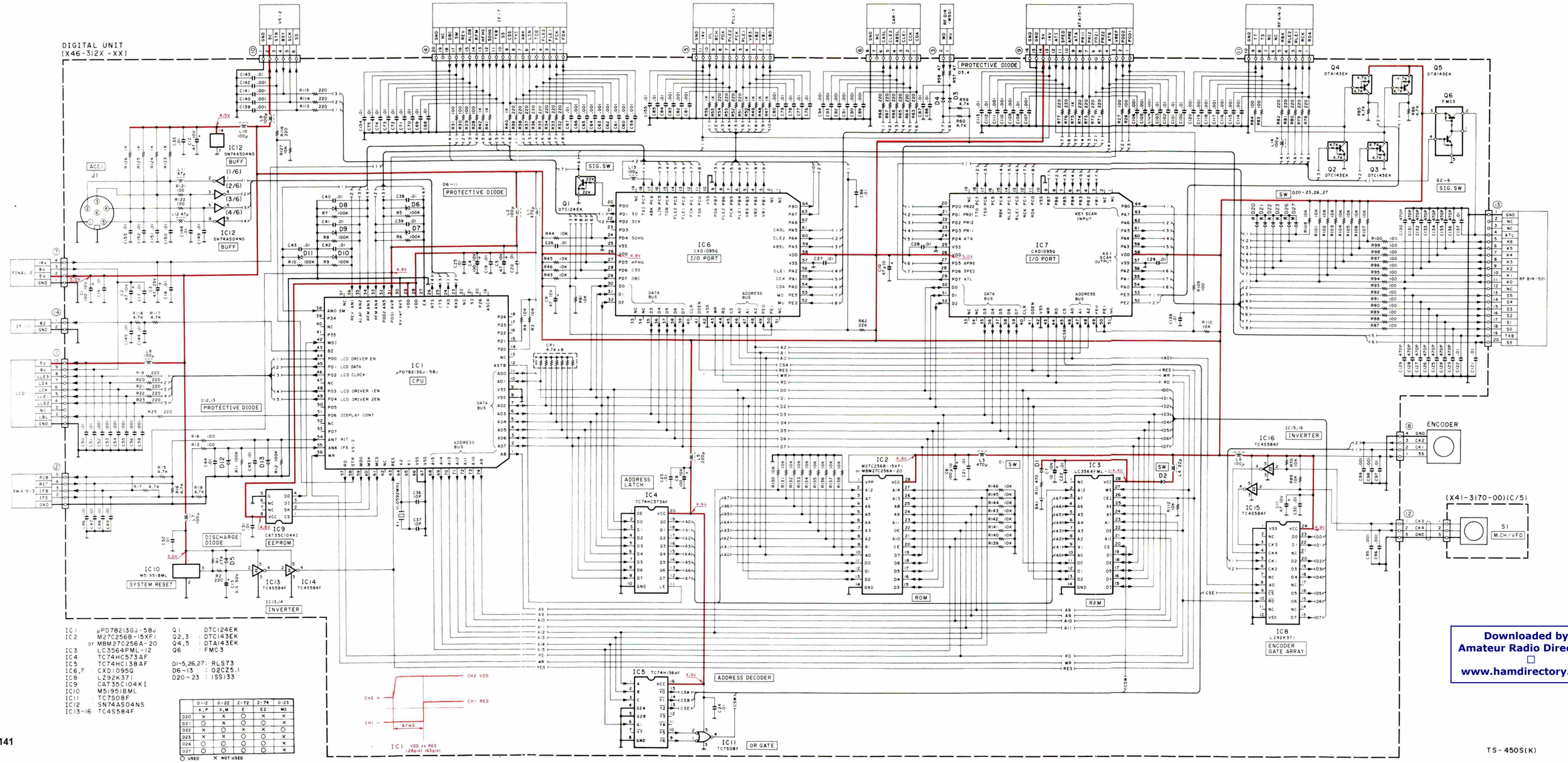

	0-12 K,P	0-22 X,M	2-72 E	2-74 E2	0-23 M2
D20	×	×	○	×	×
D21	○	×	○	○	×
D22	×	○	×	×	○
D23	×	×	○	×	×
D26	○	○	○	○	×
D27	○	○	○	○	×

○ USED × NOT USED

TS-690S CIRCUIT DIAGRAM

DIGITAL UNIT (X46-312X-XX) : TS-690S
0-11 : TS-690S (K,P) 0-21 : TS-690S (X,M) 2-71 : TS-690S (E) 2-73 : TS-690S (E2)

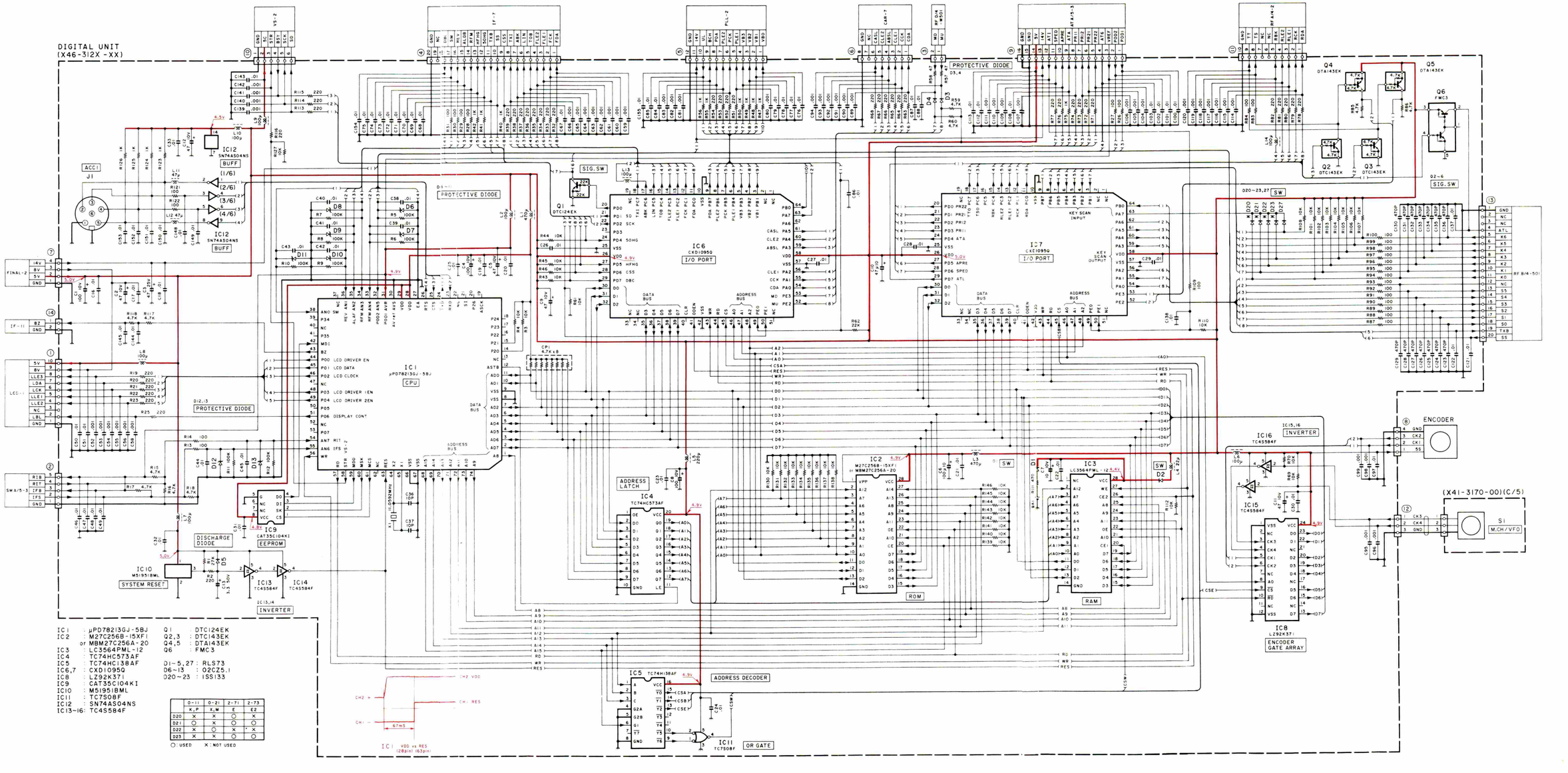

	0-11 K,P	0-21 X,M	2-71 E	2-73 E2
D20	×	×	○	×
D21	○	×	○	○
D22	×	○	×	×
D23	×	×	○	○

○ : USED × : NOT USED

SIDE TONE (X59-1060-00)
Component side view

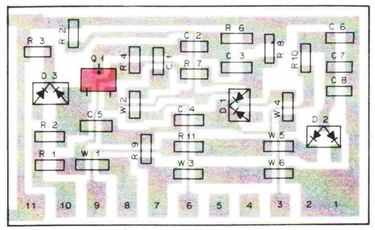

VOX (X59-1080-00)
Component side view

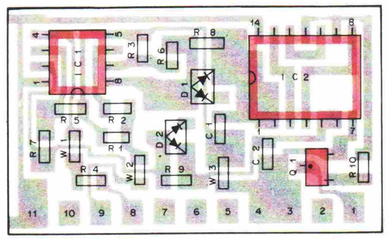

TRX (X59-3680-01)
Component side view

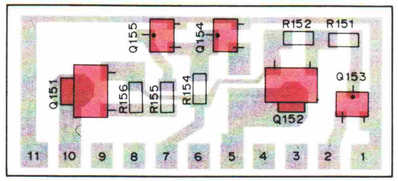

DELAY (X59-3860-00)
Component side view

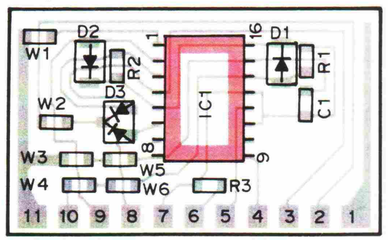

METER (X59-3940-00)
Component side view

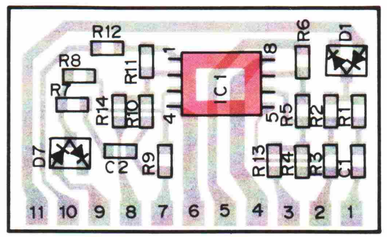

FM MIC (X59-3000-03)
Component side view

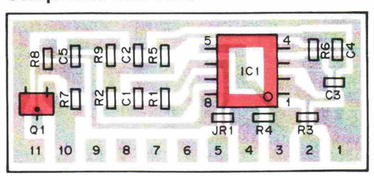

NOTCH (X59-3030-00)
Component side view

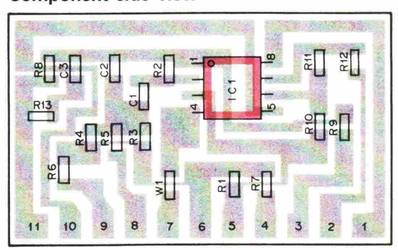

SELECT (X59-3920-00)
Component side view

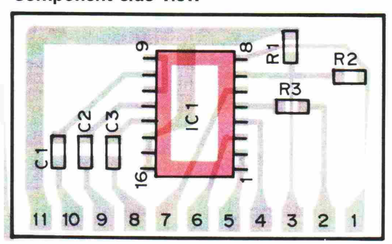

BK-IN (X59-3930-00)
Component side view

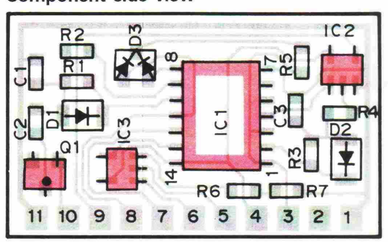

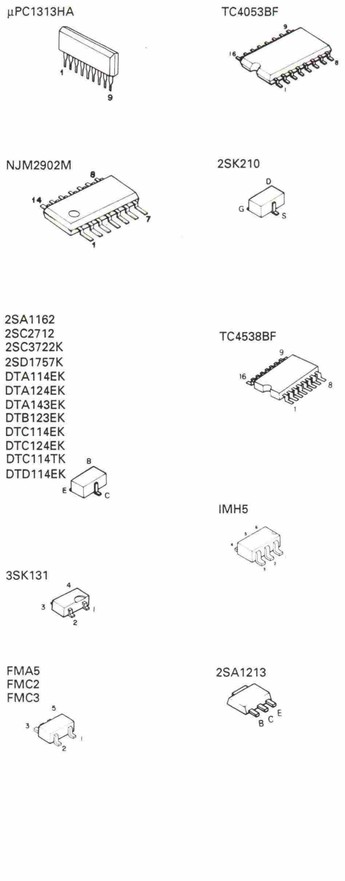

TS-450S/690S PC BOARD VIEWS

IF UNIT (X48-3090-XX) Component side view -00 : TS-690S -01 : TS-450S

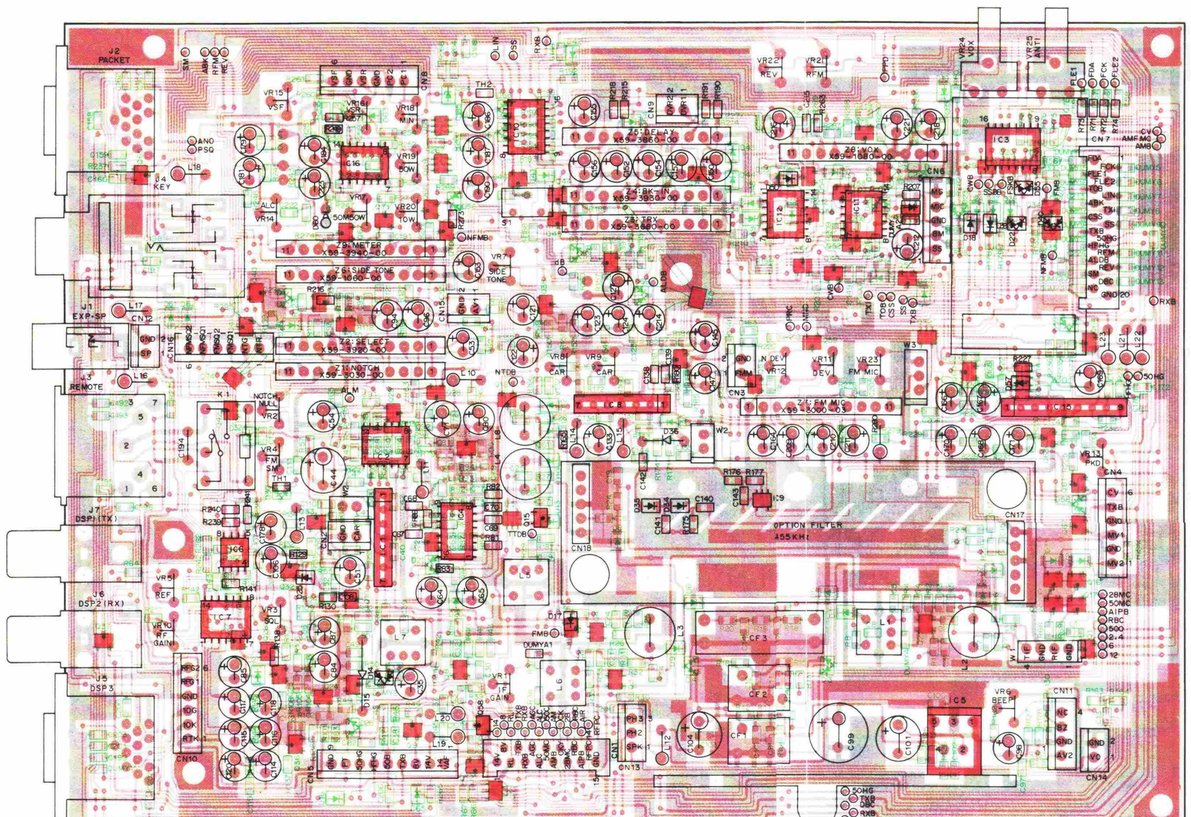

IF UNIT (X48-3090-XX) Foil side view -00 : TS-690S -01 : TS-450S

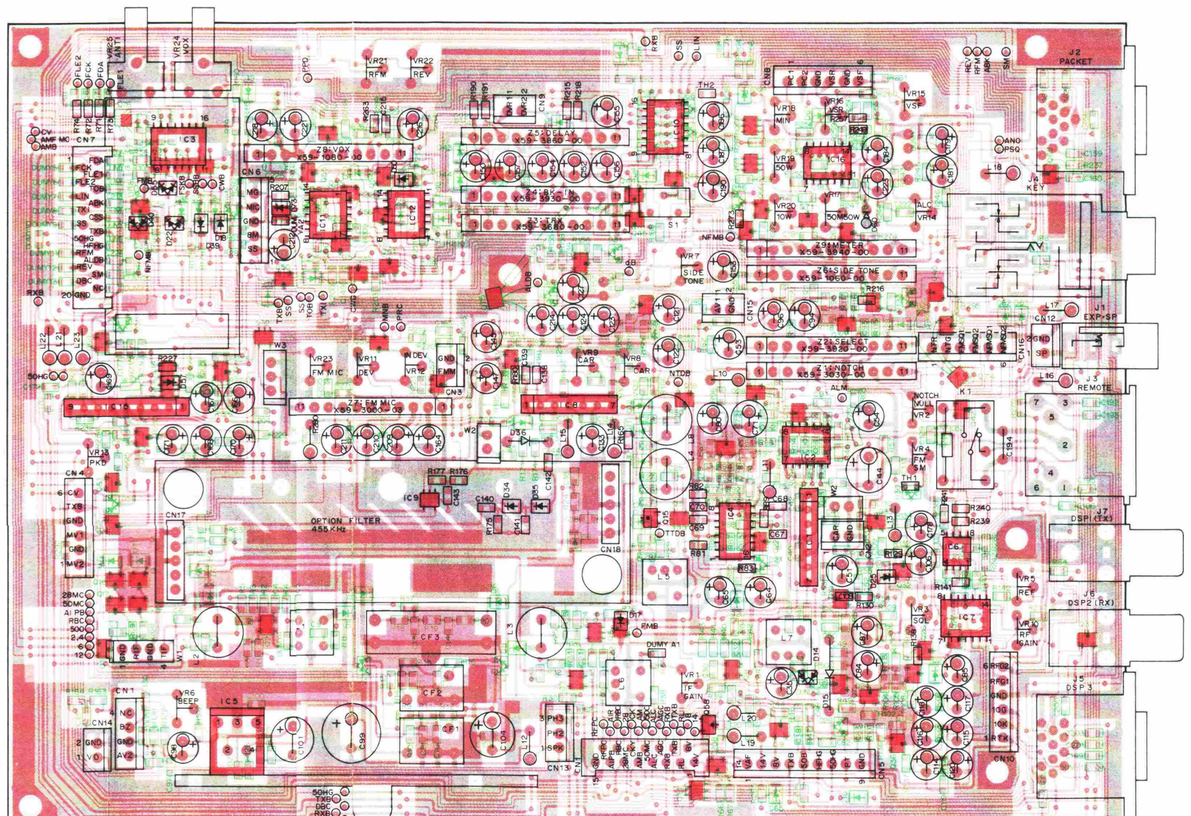

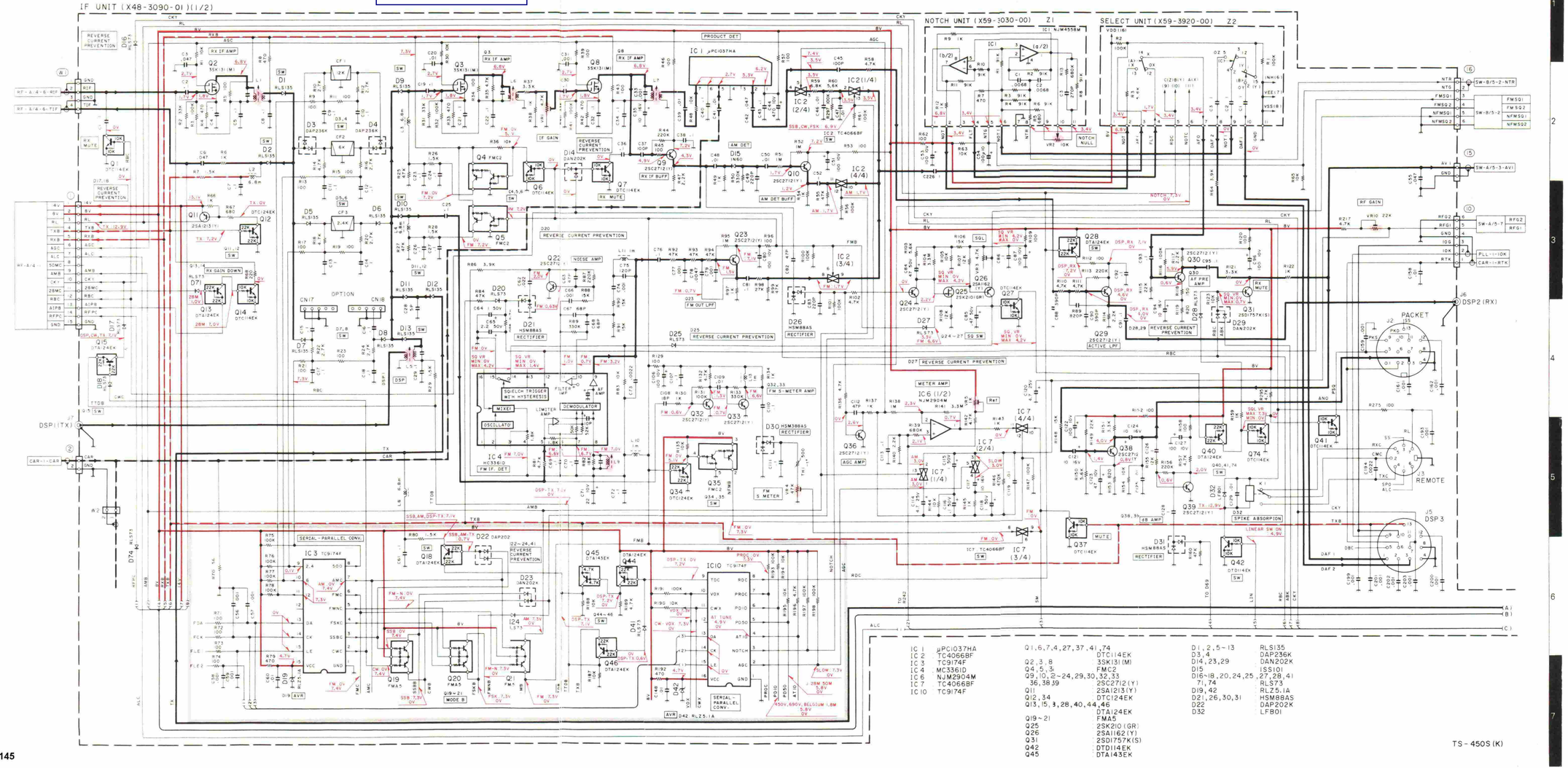

IC 1	μPC1037HA	Q1,6,7,4,27,37,41,74	DTC114EK	D1,2,5~13	RLS135
IC 2	TC4066BF	Q2,3,8	3SK131(M)	D3,4	DAP236K
IC 3	TC9174F	Q4,5,3	FMC2	D14,23,29	DAN202K
IC 4	MC3361D	Q9,10,22~24,29,30,32,33	2SC2712(Y)	D15	1SS101
IC 6	NJM2904M	36,38,39	2SA1213(Y)	D16~18,20,24,25,27,28,41	RLS73
IC 7	TC4066BF	Q11	DTC124EK	71,74	RLZ5.1A
IC 10	TC9174F	Q12,34	DTA124EK	D19,42	HSM88AS
		Q13,15,3,28,40,44,46	FMA5	D21,26,30,31	DAP202K
		Q19~21	2SK210(GR)	D22	LFB01
		Q25	2SA1162(Y)	D32	
		Q26	2SD1757K(S)		
		Q31	DTD114EK		
		Q42	DTA143EK		
		Q45			

TS-450S (K)

TS-450S CIRCUIT DIAGRAM

IF UNIT (X48-3090-01) : TS-450S

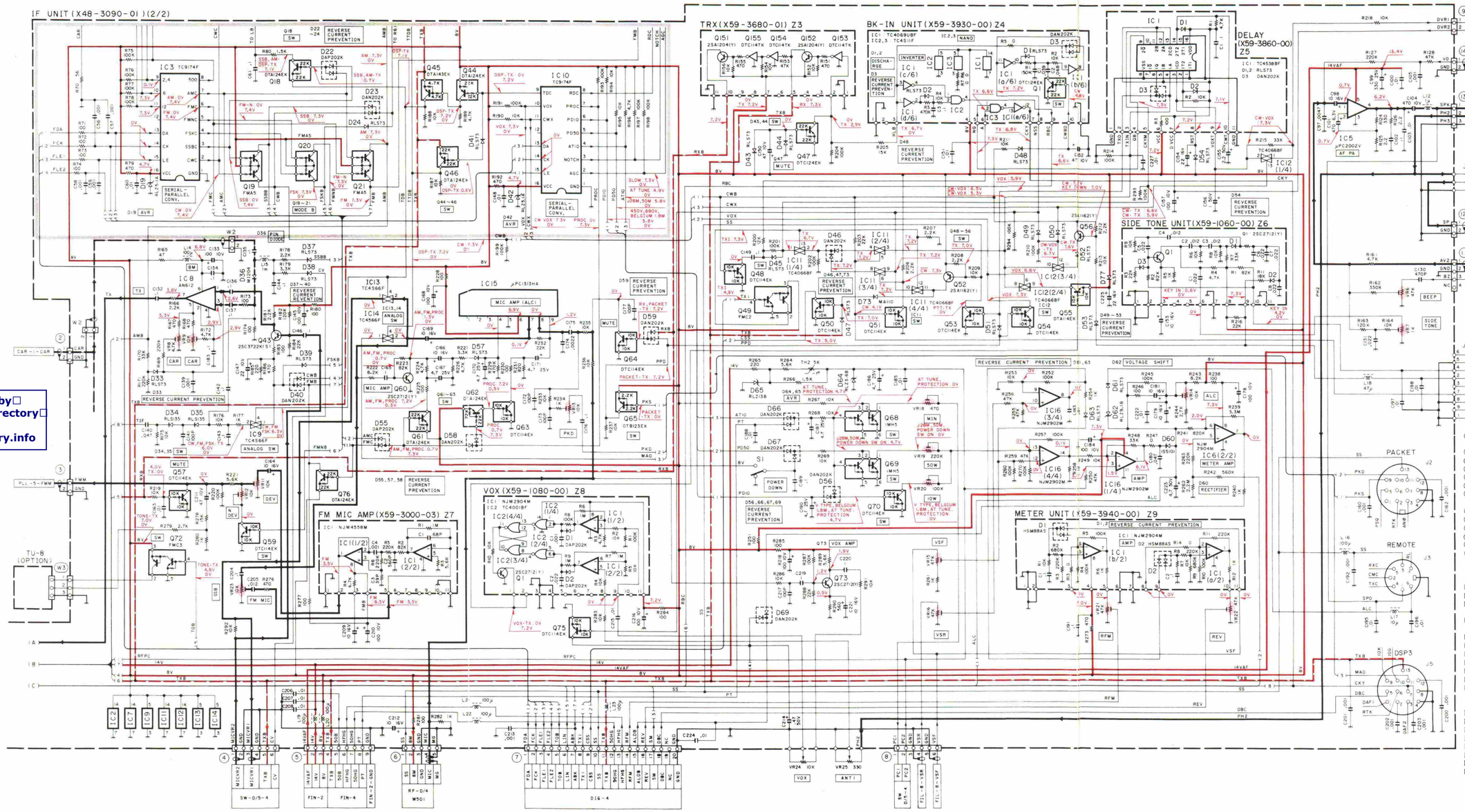

Q18,44,46,61,62,76	DTA124EK
Q19~21	FMA5
Q43	2SC3722K(S)
Q45	DTA143EK
Q47	DTC124EK
Q49	FMC2
Q48,50,51,53,54,57,59,63,64 70,75	DTC114EK
Q52,56	2SA1162(Y)
Q55	DTA114EK
Q60,73	2SC2712(Y)
Q65	DTB123EK
Q68,69	IMH5
Q72	FMC3
D19,42	RLZ5.1A
D22,55	DAP202K
D23,40,46,56,58,59 66,67,69	DAN202K
D24,33,37~39,41,43~45,47~54 57,61,63,77	RLS73
D34,35	RLS135
D36	MI204
D60	ISS101
D62	RLZ9.1B
D64	RLZ36B
D65	RLZ13B
D73	MA110
IC 3,10	TC9174F
IC 5	μPC2002V
IC 6	NJM2904M
IC 8	AN612
IC 9,13,14	TC4566F
IC 11,12	TC4066BF
IC 15	μPC1313HA
IC 16	NJM2902M

TS-450S(K)

CIRCUIT DIAGRAM TS-690S

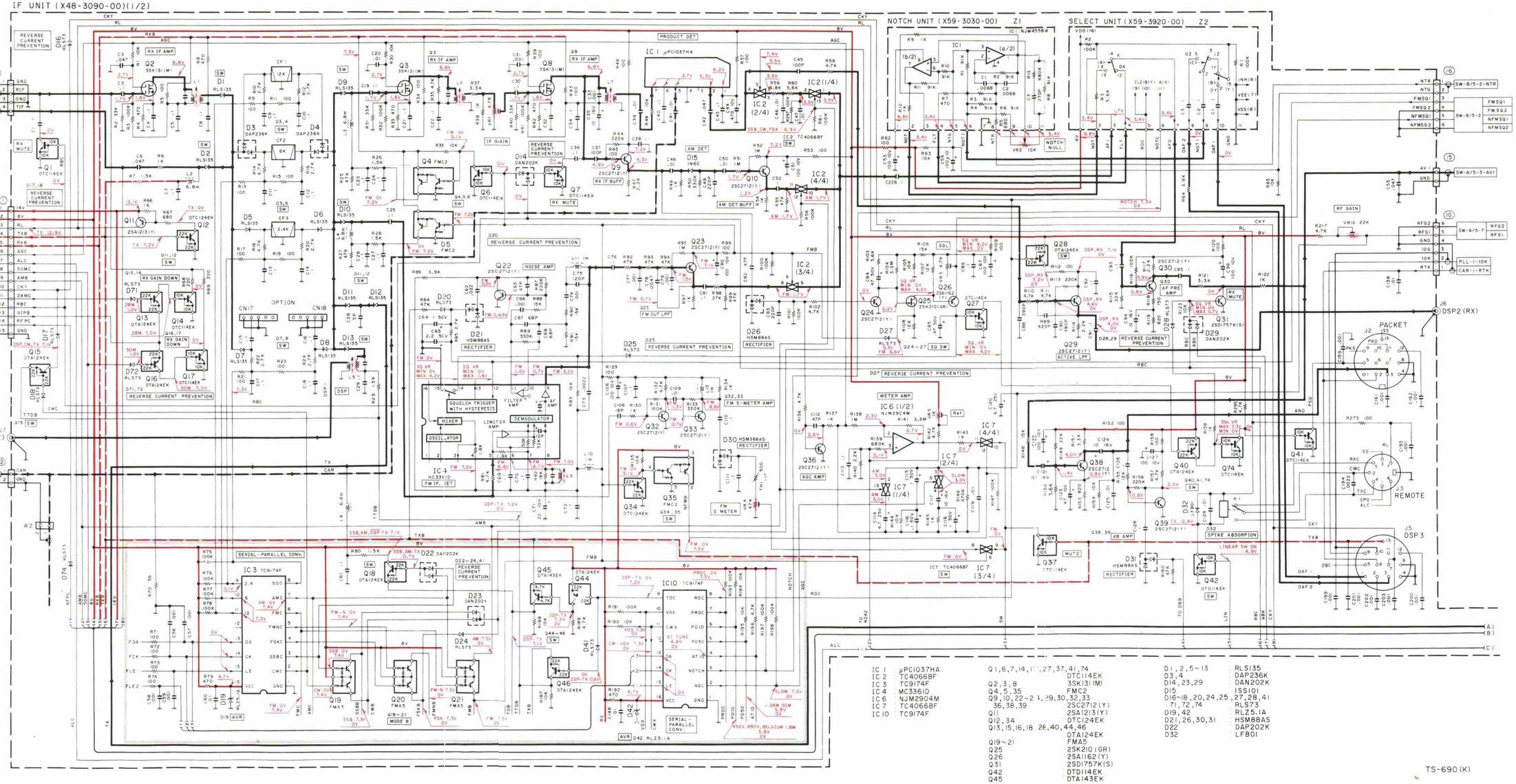

IC 1	μPC1037HA	Q1,6,7,14,17,27,37,41,74	DTC114EK	D1,2,5~13	RLS135
IC 2	TC4066BF	Q2,3,8	3SK131(M)	D3,4	DAP236K
IC 3	TC9174F	Q4,5,35	FMC2	D14,23,29	DAN202K
IC 4	MC3361D	Q9,10,22~24,29,30,32,33 36,38,39	2SC2712(Y)	D15	1SS101
IC 6	NJM2904M	Q11	2SA1213(Y)	D16~18,20,24,25,27,28,41 71,72,74	RLS73
IC 7	TC4066BF	Q12,34	DTC124EK	D19,42	RLZ5.1A
IC 10	TC9174F	Q13,15,16,18 26,40,44,46	DTA124EK	D21,26,30,31	HSM88AS
		Q19~21	FMA5	D22	DAP202K
		Q25	2SK210(GR)	D32	LFB01
		Q26	2SA1162(Y)		
		Q31	2SD1757K(S)		
		Q42	DTD114EK		
		Q45	DTA143EK		

TS-690S CIRCUIT DIAGRAM

IF UNIT (X48-3090-00) : TS-690S

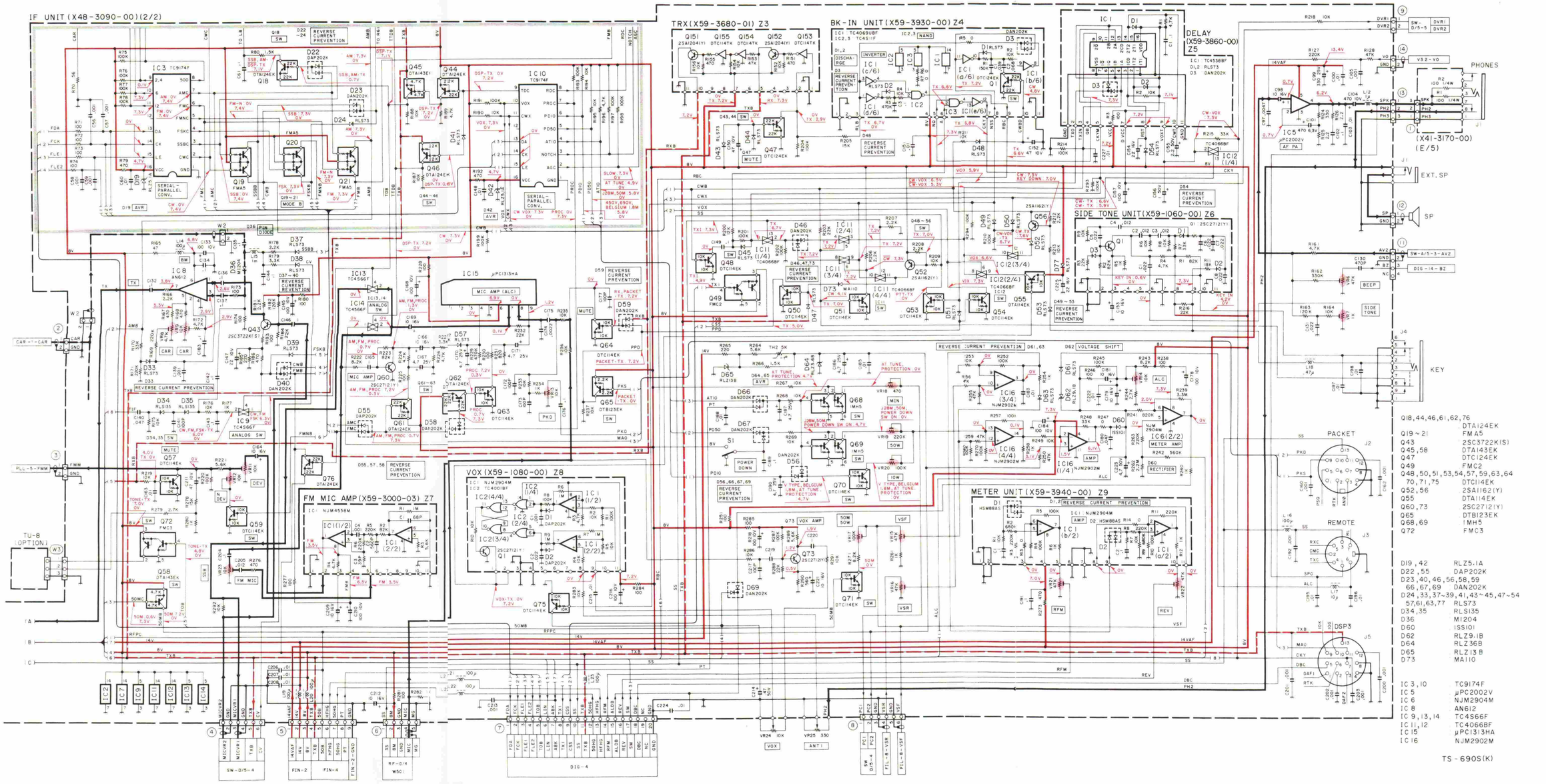

Q18,44,46,61,62,76	DTA124EK
Q19~21	FMA5
Q43	2SC3722K(S)
Q45,58	DTA143EK
Q47	DTC124EK
Q49	FMC2
Q48,50,51,53,54,57,59,63,64 70,71,75	DTC114EK
Q52,56	2SA1162(Y)
Q55	DTA114EK
Q60,73	2SC2712(Y)
Q65	DTB123EK
Q68,69	IMH5
Q72	FMC3
D19,42	RLZ5.1A
D22,55	DAP202K
D23,40,46,56,58,59 66,67,69	DAN202K
D24,33,37~39,41,43~45,47~54 57,61,63,77	RLS73
D34,35	RLS135
D36	M1204
D60	ISS101
D62	RLZ9.1B
D64	RLZ36B
D65	RLZ13B
D73	MA110
IC3,10	TC9174F
IC5	μPC2002V
IC6	NJM2904M
IC8	AN612
IC9,13,14	TC4S66F
IC11,12	TC4066BF
IC15	μPC1313HA
IC16	NJM2902M

TS-690S(K)

PLL UNIT (X50-3150-XX) Component side view
-00 : TS-690S -01 : TS-450S

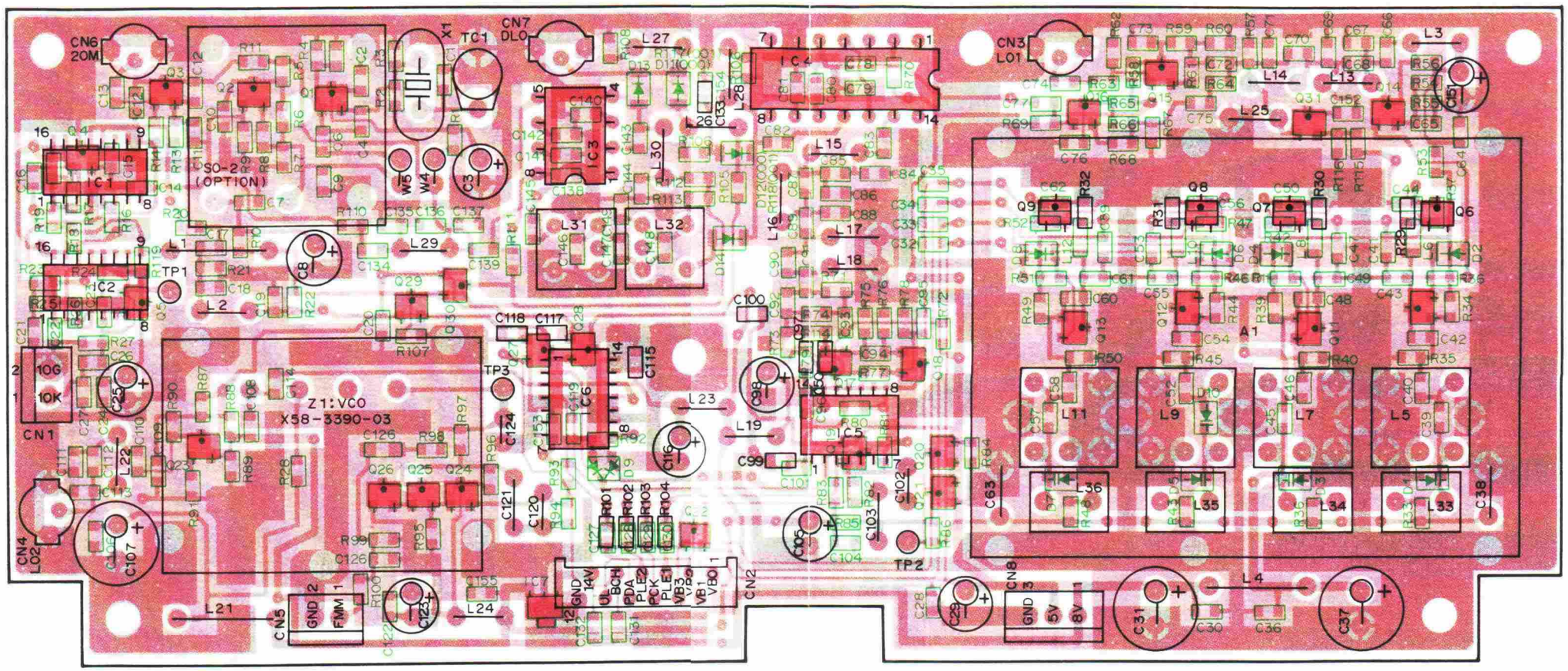

PLL UNIT (X45-3150-XX) Foil side view
-00 : TS-690S -01 : TS-450S

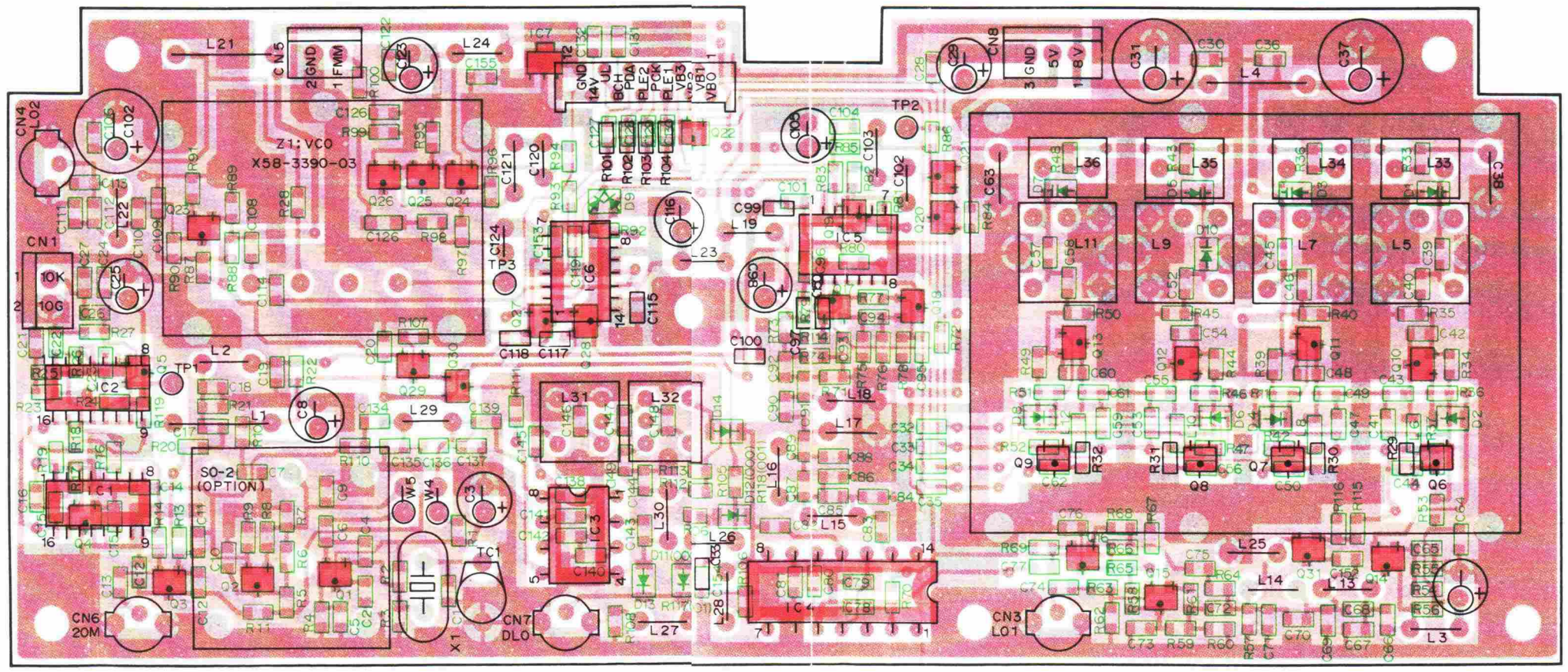

PLL UNIT (X50-3150-01) : TS-450S

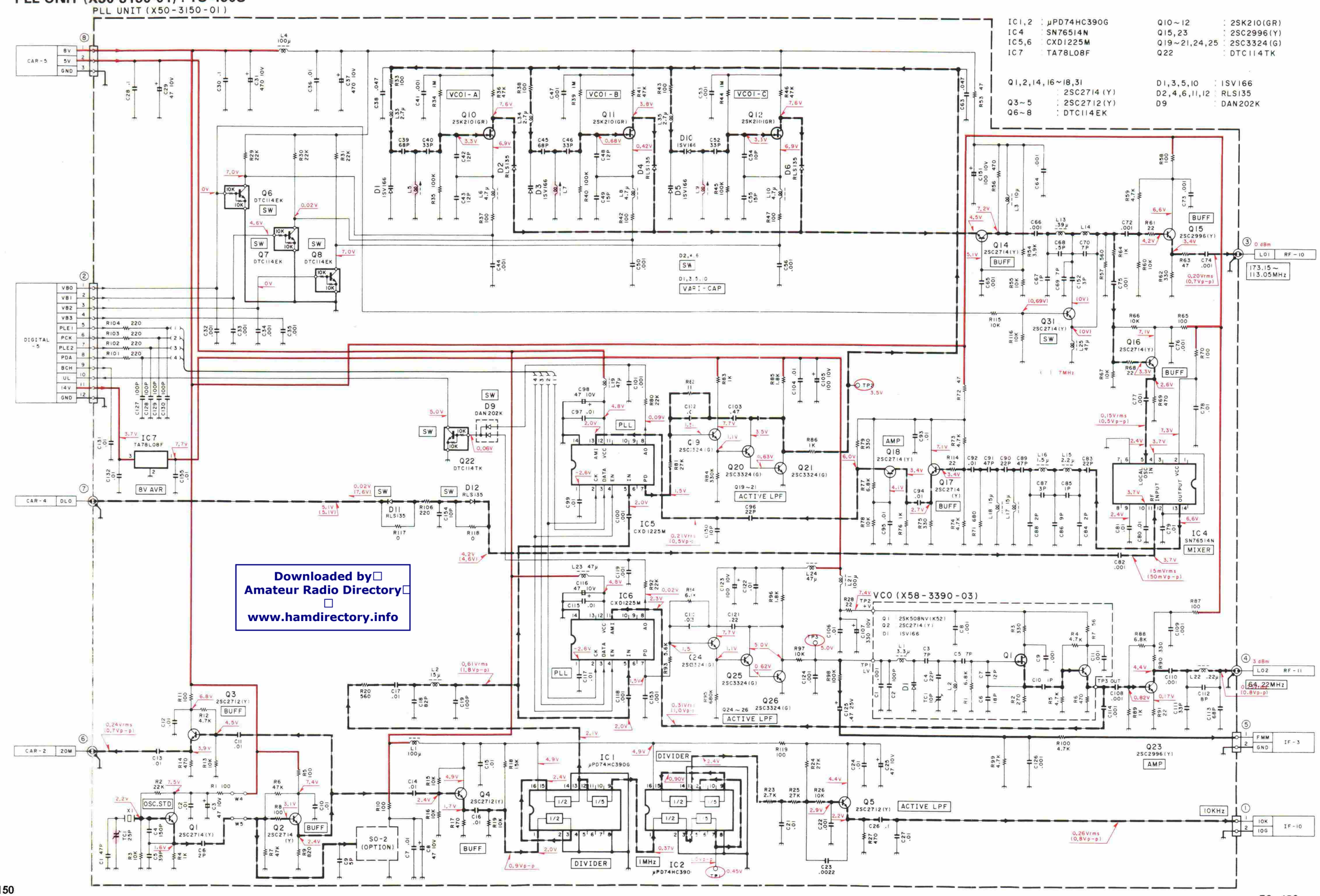

TS-690S CIRCUIT DIAGRAM / PC BOARD VIEWS

PLL UNIT (X50-3150-00) : TS-690S

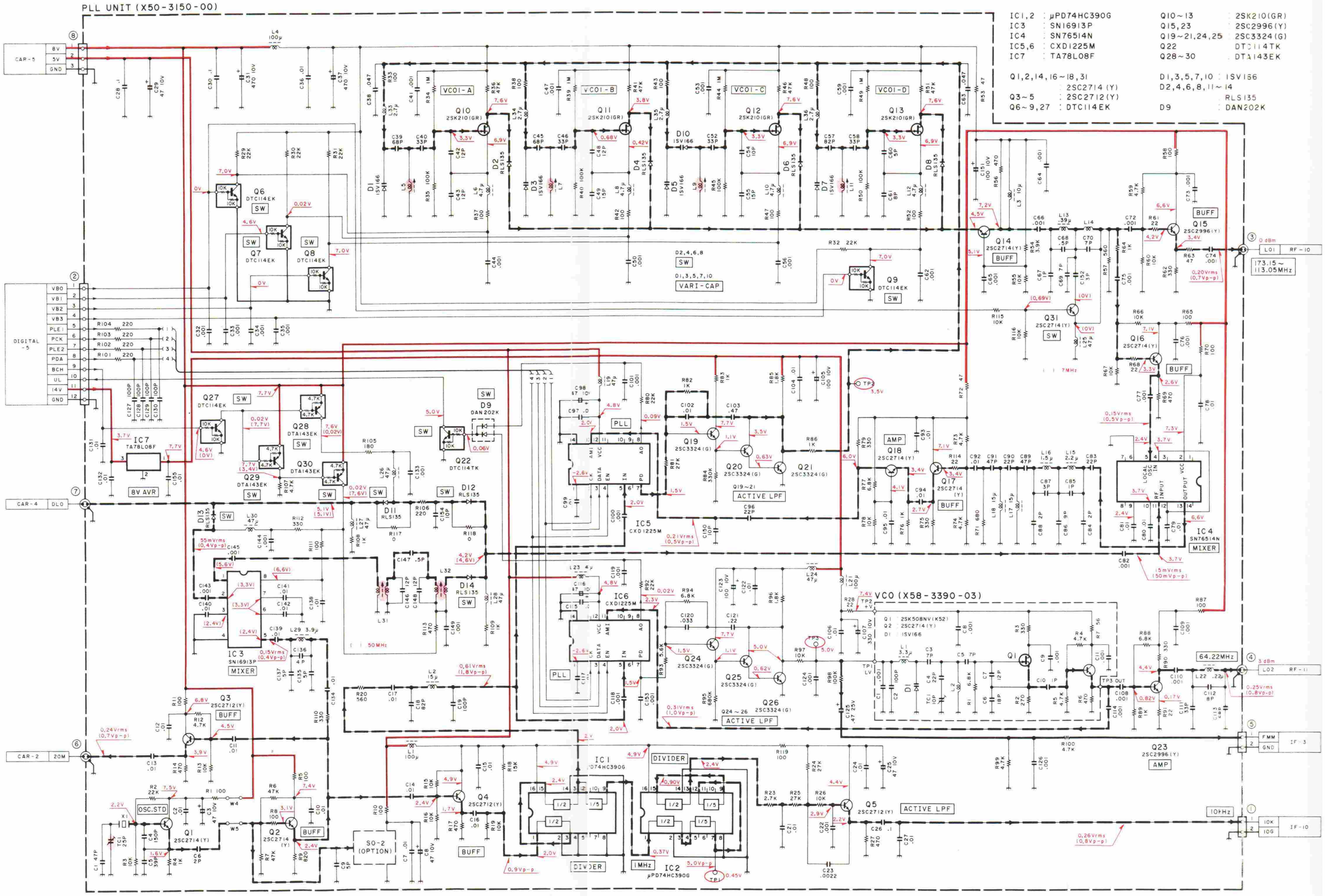

IC1,2 : μPD74HC390G
IC3 : SN16913P
IC4 : SN76514N
IC5,6 : CXD1225M
IC7 : TA78L08F

Q1,2,14,16~18,31 : 2SC2714 (Y)
Q3~5 : 2SC2712 (Y)
Q6~9,27 : DTC114EK
Q10~13 : 2SK210(GR)
Q15,23 : 2SC2996(Y)
Q19~21,24,25 : 2SC3324(G)
Q22 : DTC114TK
Q28~30 : DTA143EK

D1,3,5,7,10 : 1SV166
D2,4,6,8,11~14 : RLS135
D9 : DAN202K

VCO2 (X58-3390-03) Component side view

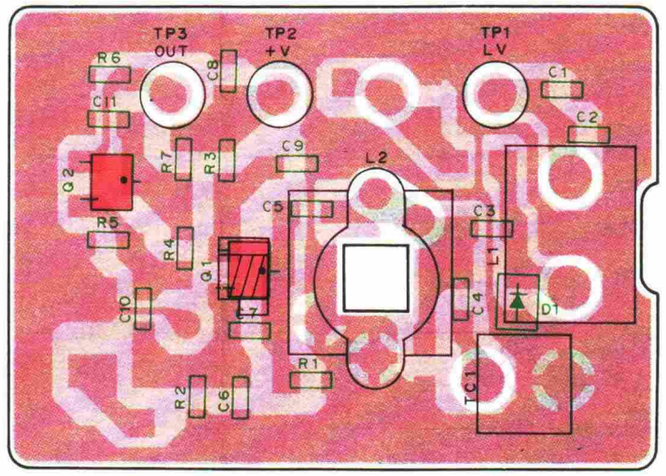

VCO2 (X58-3390-03) Foil side view

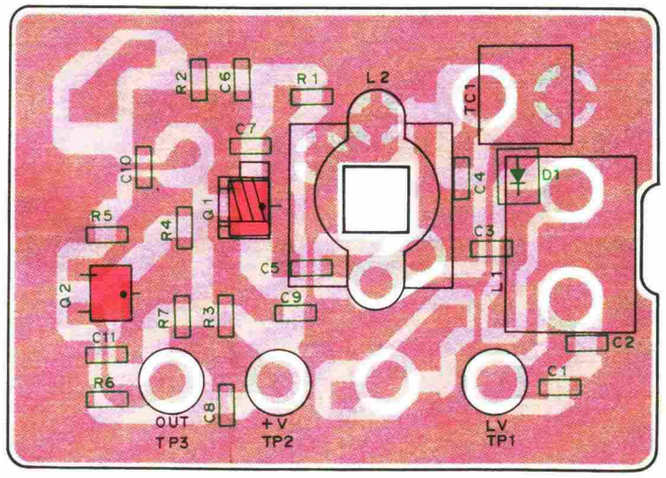

µPD74HC390G

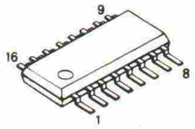

SN16913P

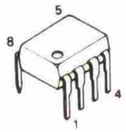

SN76514N

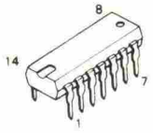

CXD1225M

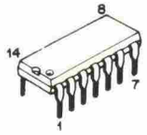

2SK210

2SK508NV

2SC2996
2SC3324
2SC2714
2SC2712
DTC114EK
DTC114TK
DTA143EK

TA78L08F

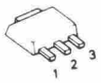

TC7S04F

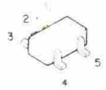

YM6631

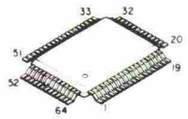

CAR UNIT (X50-3160-00) Component side view

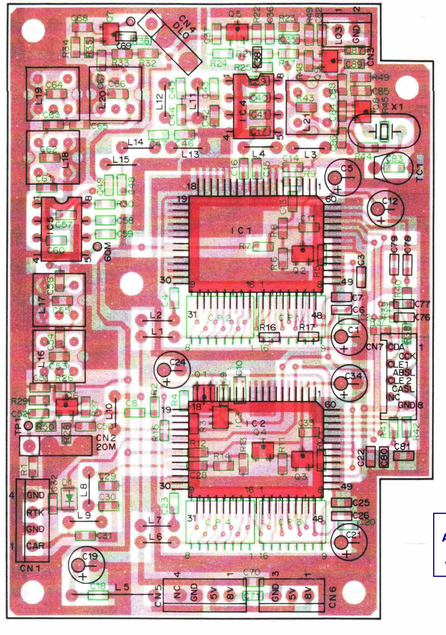

CAR UNIT (X50-3160-00) Foil side view

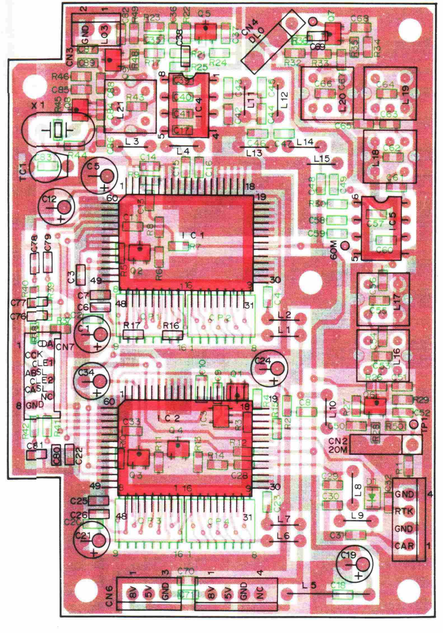

CAR UNIT (X50-3160-00)

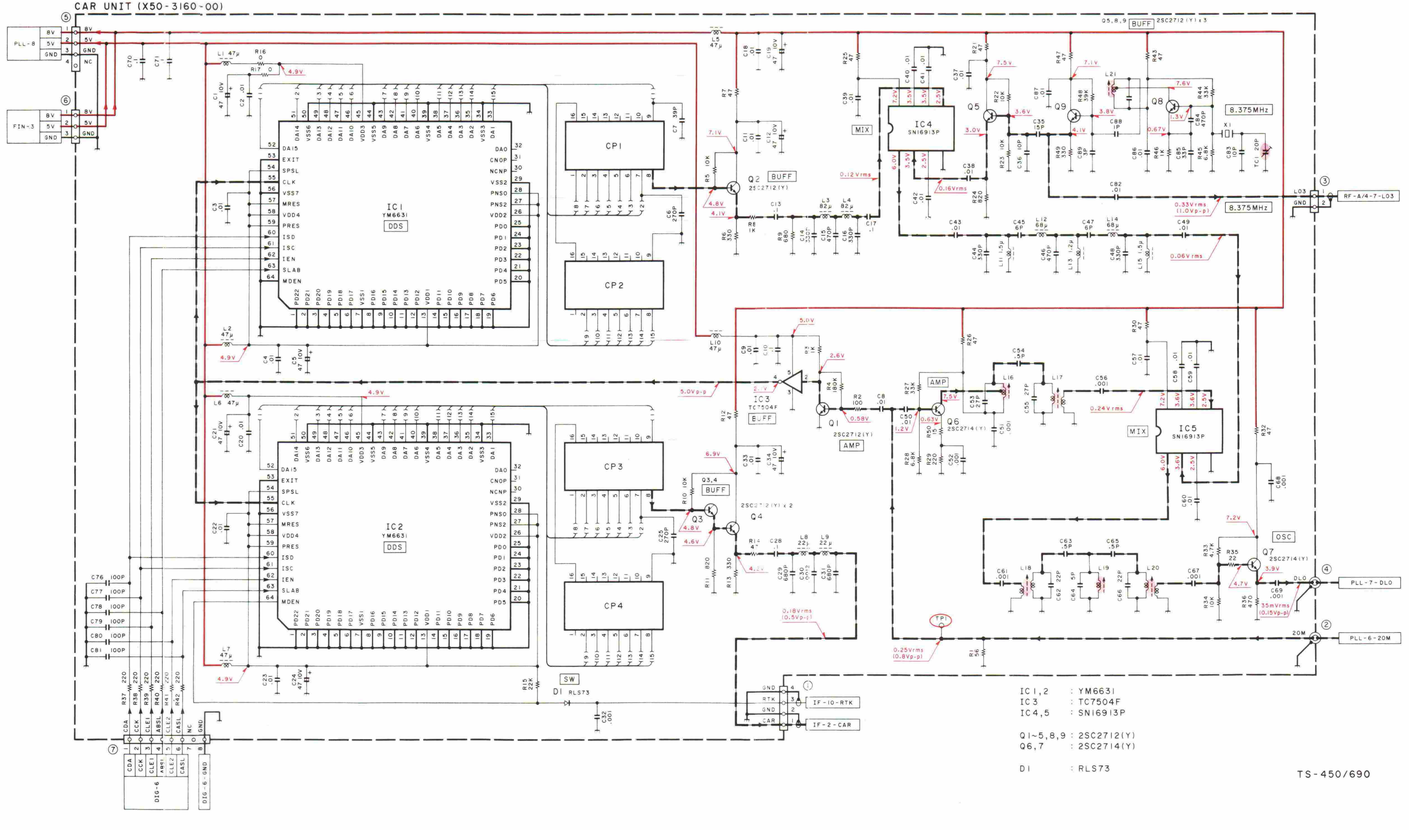

IC1,2 : YM6631
IC3 : TC7504F
IC4,5 : SN16913P

Q1~5,8,9 : 2SC2712(Y)
Q6,7 : 2SC2714(Y)

D1 : RLS73

TS-450/690

TS-450S CIRCUIT DIAGRAM / PC BOARD VIEWS

FILTER UNIT (X51-3110-XX) Component side view
-00 : TS-690S (K,X,P,E,E2) -01 : TS-450S (K,X,P,E,E2) -21 : TS-690S (M) -22 : TS-450S (M,M2)

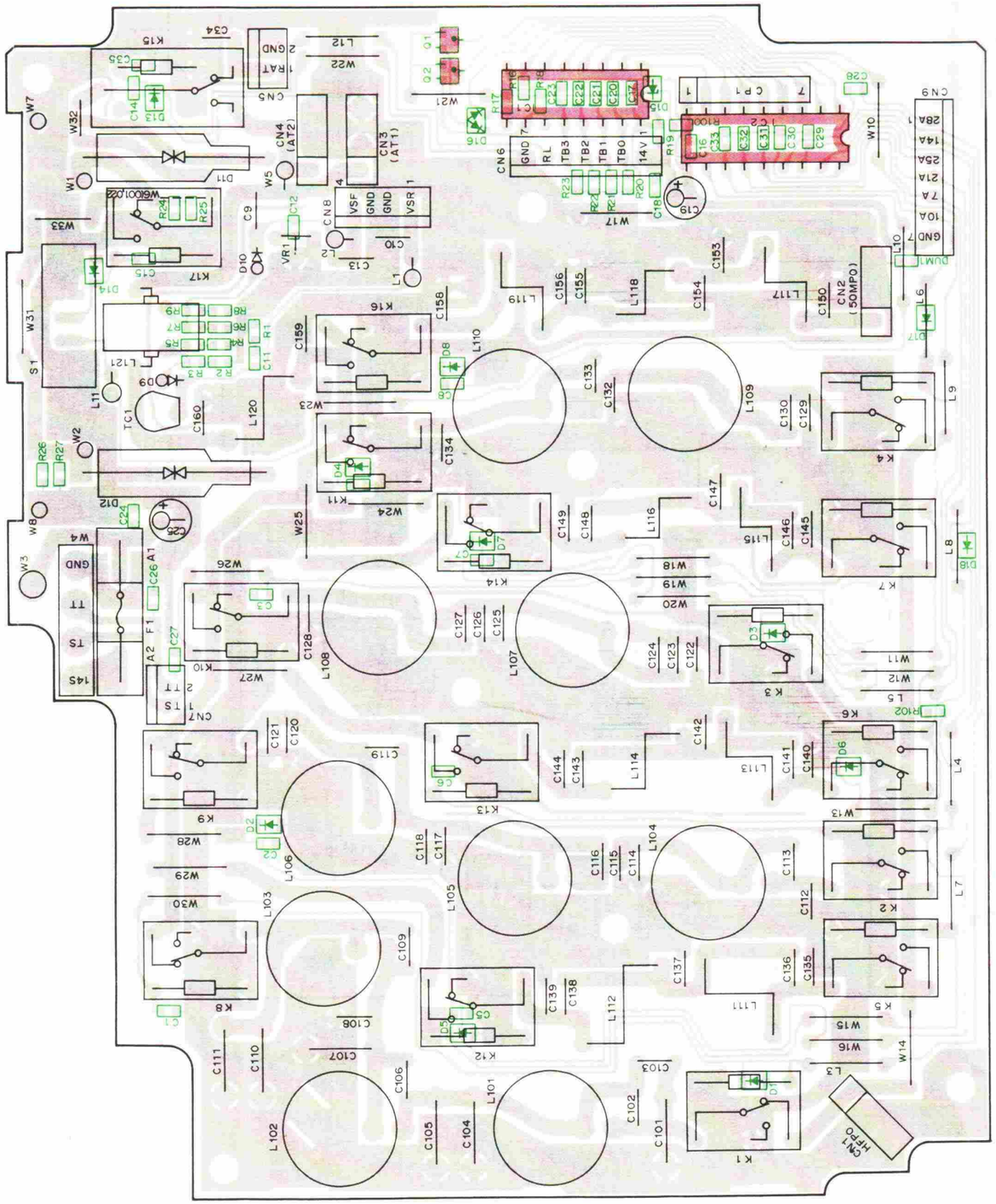

FILTER UNIT (X51-3110-XX) Foil side view
-00 : TS-690S (K,X,P,E,E2) -01 : TS-450S (K,X,P,E,E2) -21 : TS-690S (M) -22 : TS-450S (M,M2)

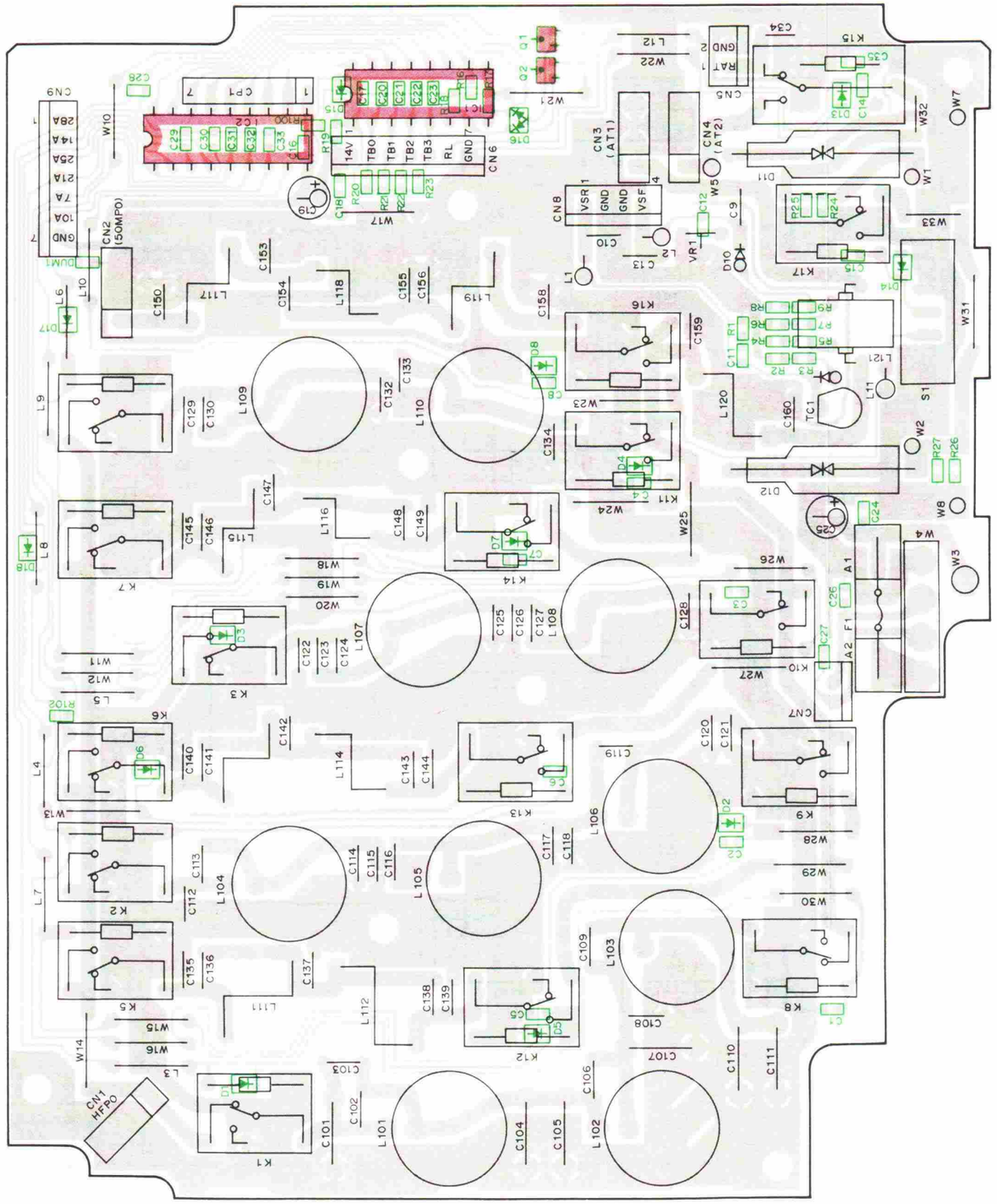

SN74LS145N

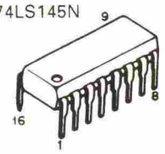

M54581P

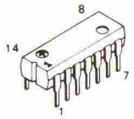

DTB143EK

FILTER UNIT (X51-3110-XX) : TS-450S

-01 : K,X,P,E,E2 -22 : M,M2

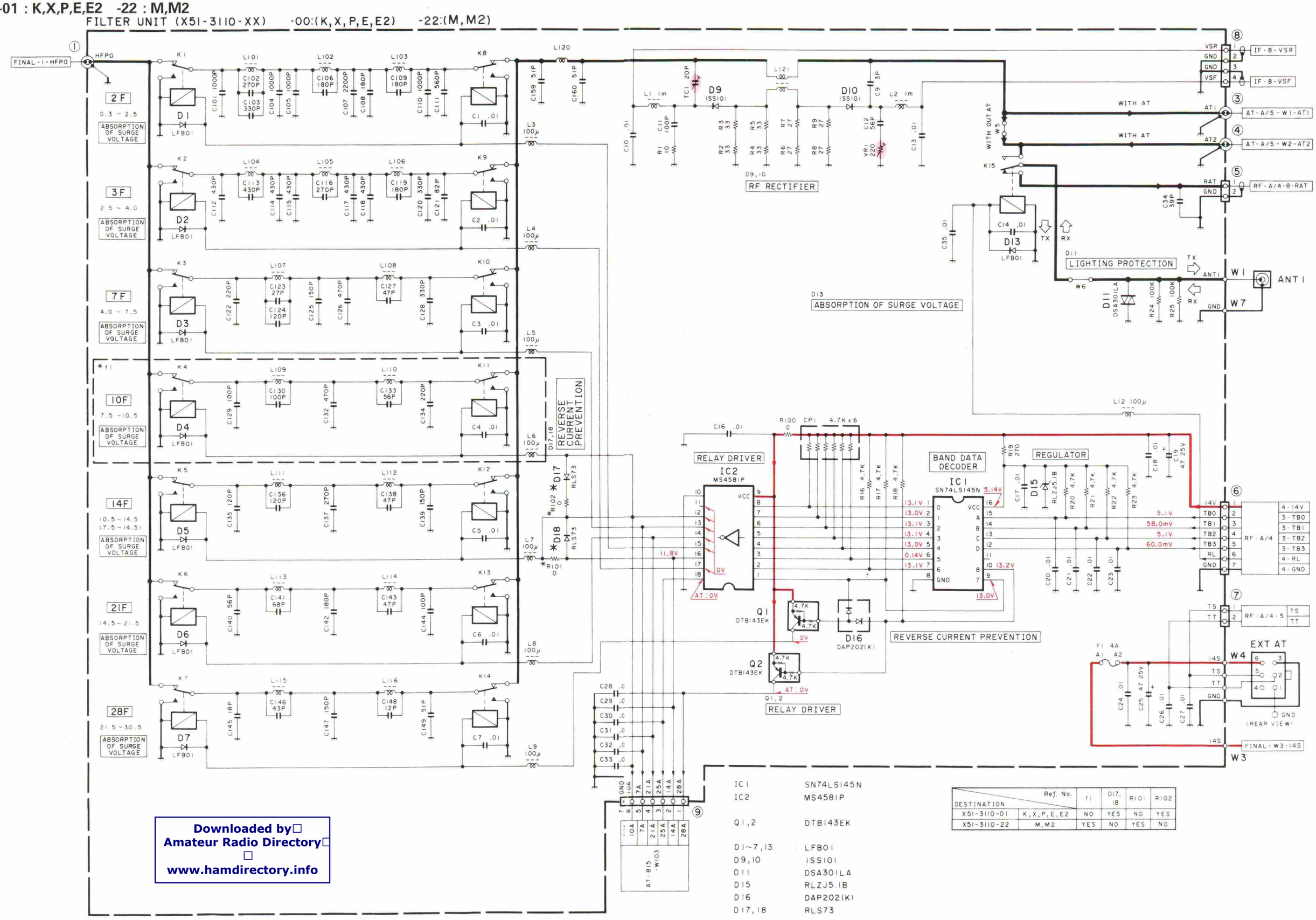

IC1	SN74LS145N
IC2	MS4581P
Q1,2	DTB143EK
D1~7,13	LFB01
D9,10	ISS101
D11	DSA301LA
D15	RLZJ5.1B
D16	DAP202(K)
D17,18	RLS73

DESTINATION \ Ref. No.		f1	D17, 18	R101	R102
X51-3110-01	K,X,P,E,E2	NO	YES	NO	YES
X51-3110-22	M,M2	YES	NO	YES	NO

FILTER UNIT (X51-3110-XX) : TS-690S
-00 : K,X,P,E,E2 -21 : M

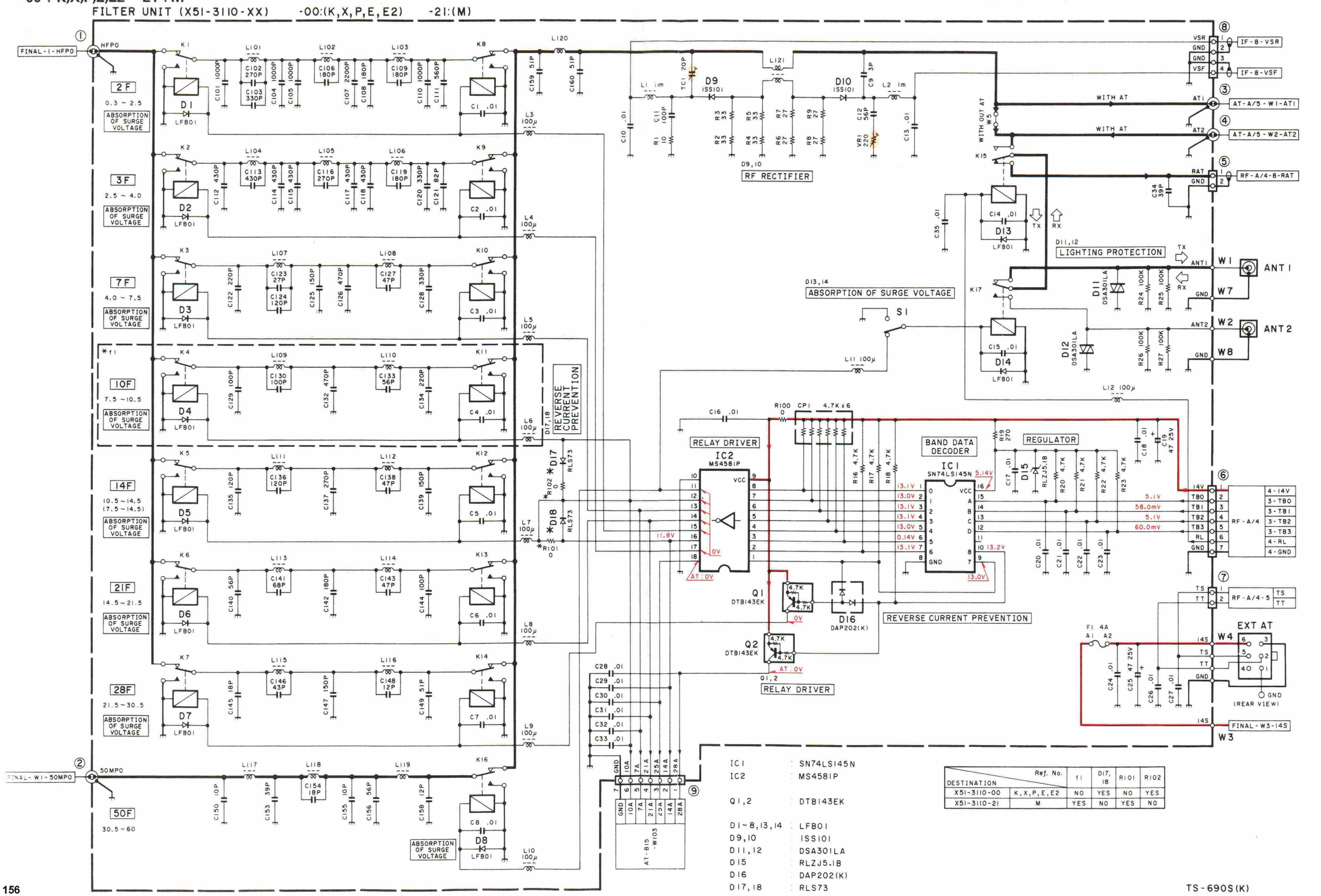

IC1	SN74LS145N
IC2	MS4581P
Q1,2	DTB143EK
D1~8,13,14	LFB01
D9,10	ISS101
D11,12	DSA301LA
D15	RLZJ5.1B
D16	DAP202(K)
D17,18	RLS73

DESTINATION	Ref. No.	f1	D17, 18	R101	R102
X51-3110-00	K,X,P,E,E2	NO	YES	NO	YES
X51-3110-21	M	YES	NO	YES	NO

TS-450S PC BOARD VIEWS

AT UNIT/AT-450 (X53-3370-00) Component side view : TS-450S

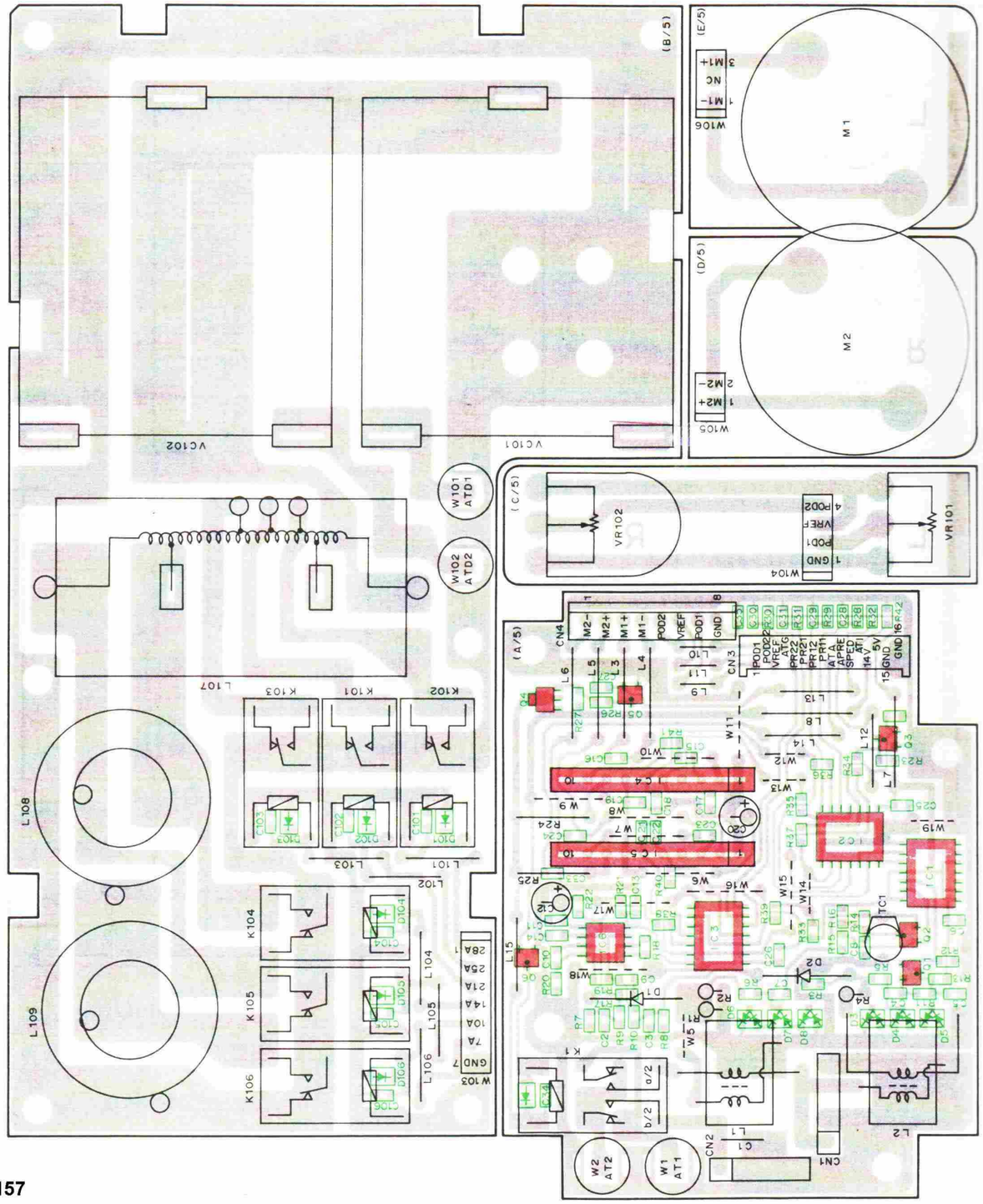

AT UNIT/AT-450 (X53-3370-00) Foil side view : TS-450S

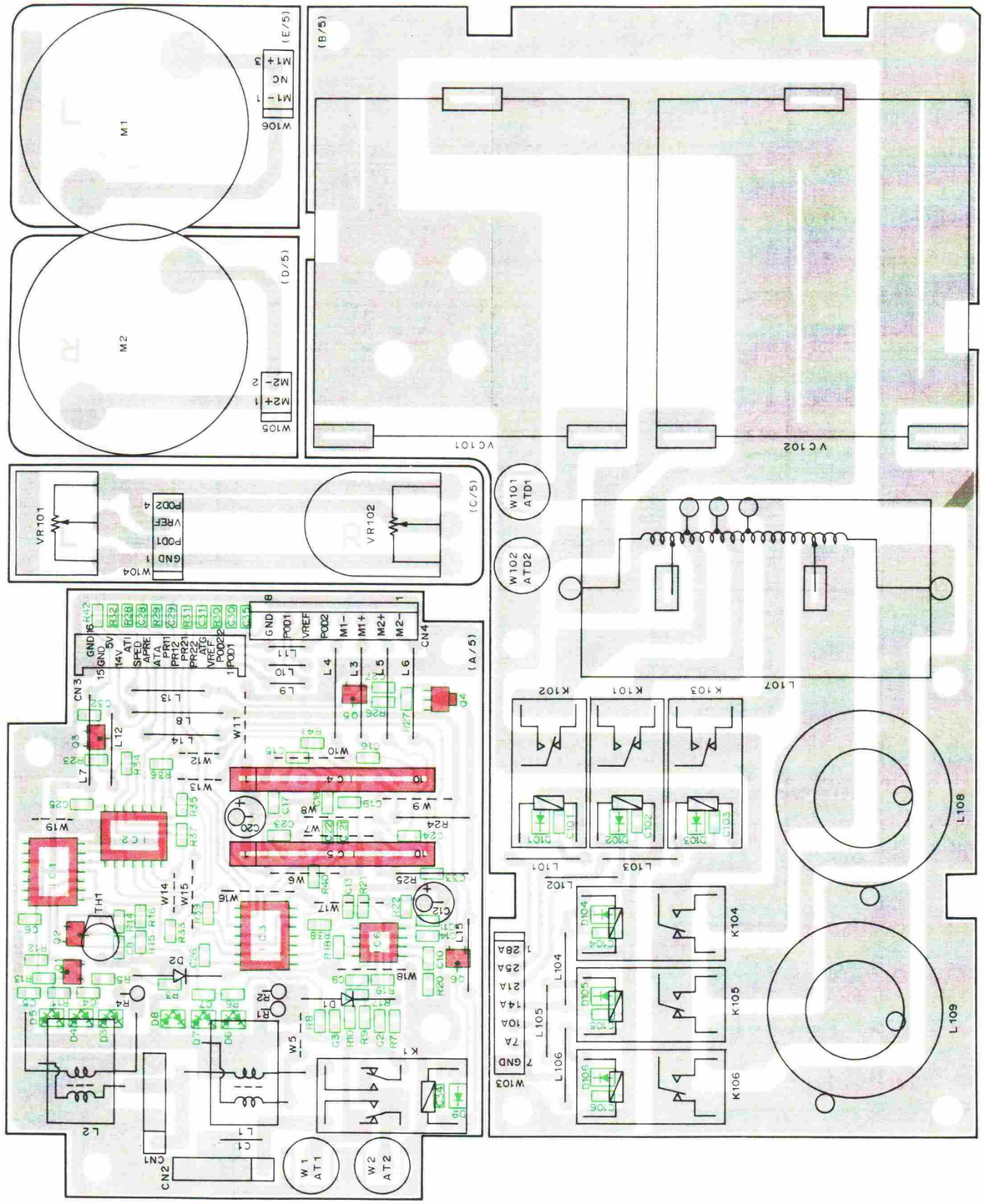

AT UNIT/AT-450 (X53-3370-00) : TS-450S

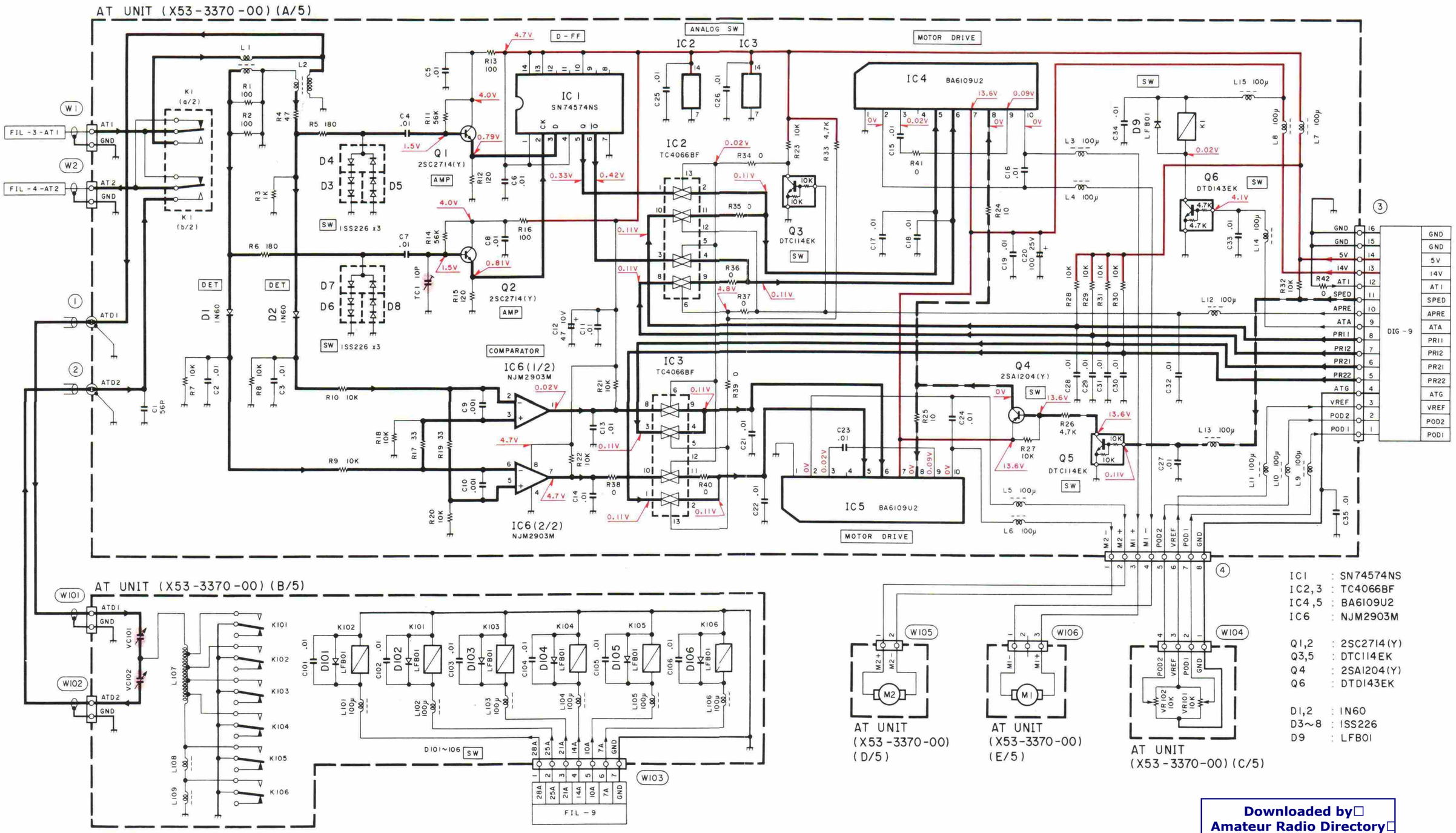

TS-450S/690S CIRCUIT DIAGRAM / PC BOARD VIEWS

SWITCH UNIT (X41-3170-00) Component side view

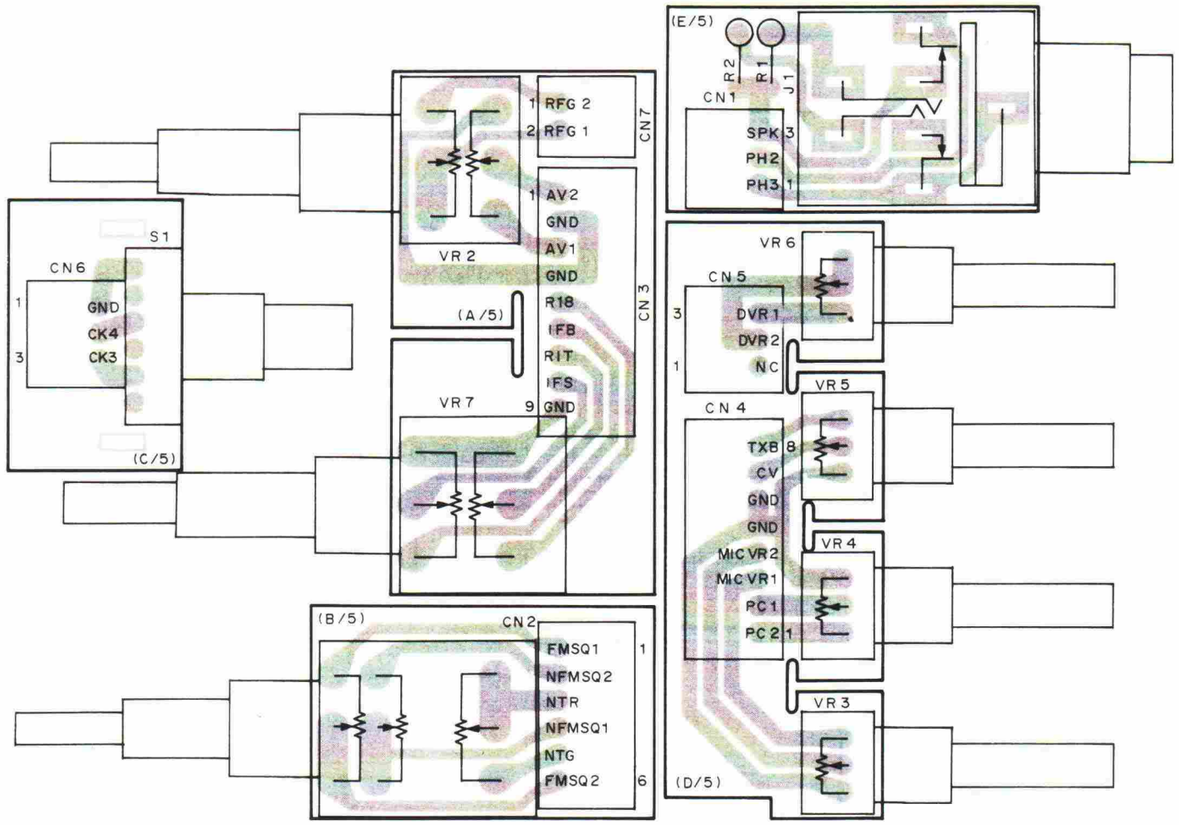

SN74S74NS

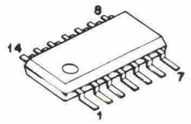

2SA1204

TC4066BF

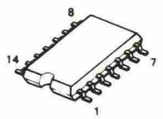

2SC2714
DTC114EK
DTD143EK

BA6109U2

NJM2903M

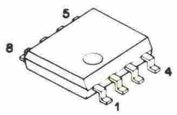

LCD ASSY (B38-0361-05)

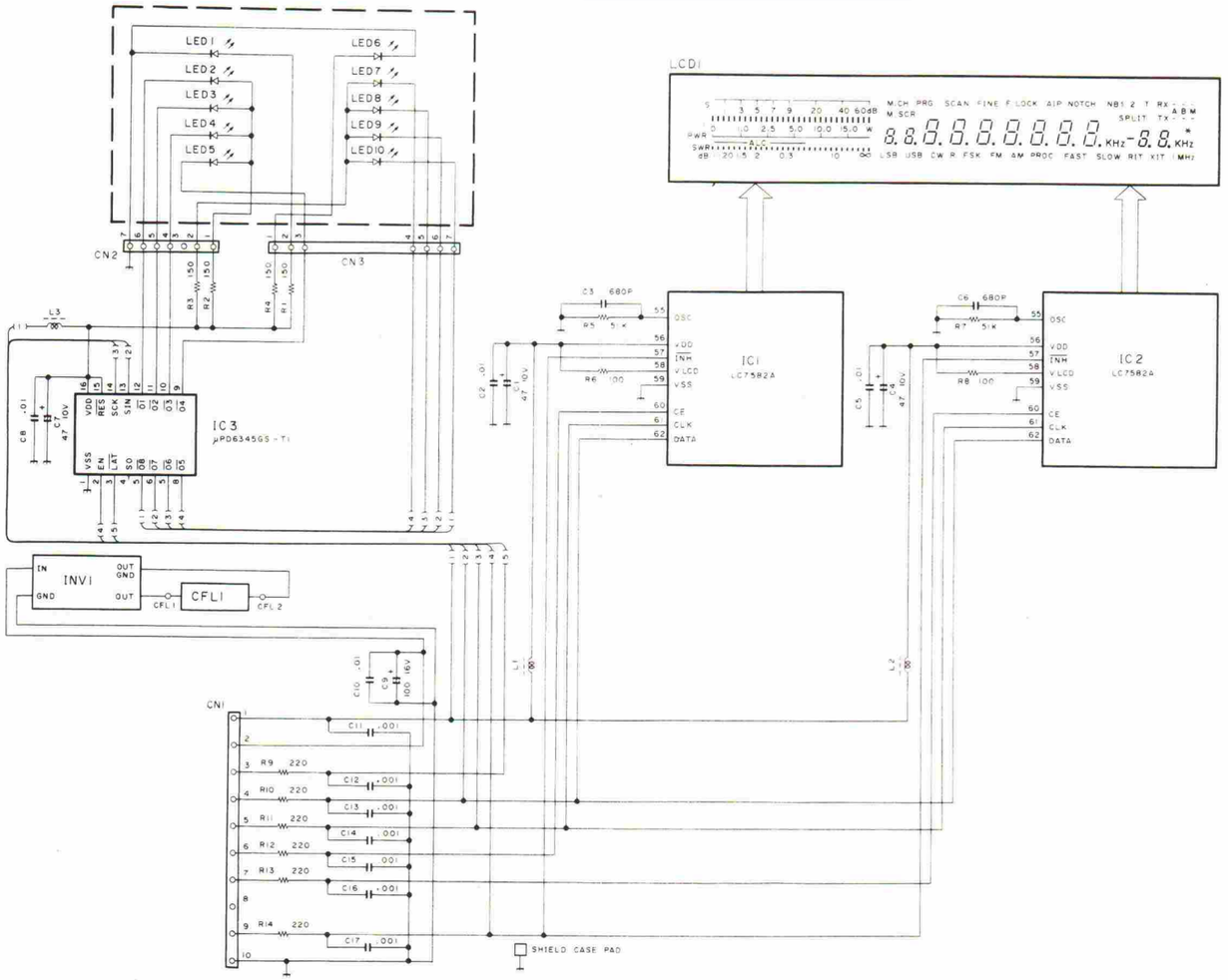

LCD ASSY (B38-0361-05) Component side view

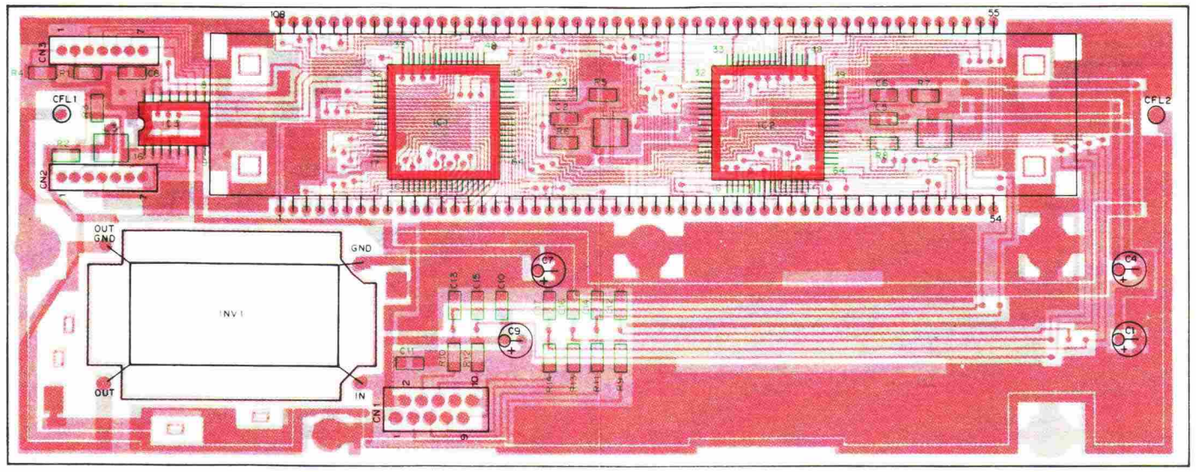

SCHEMATIC DIAGRAM TS-450S

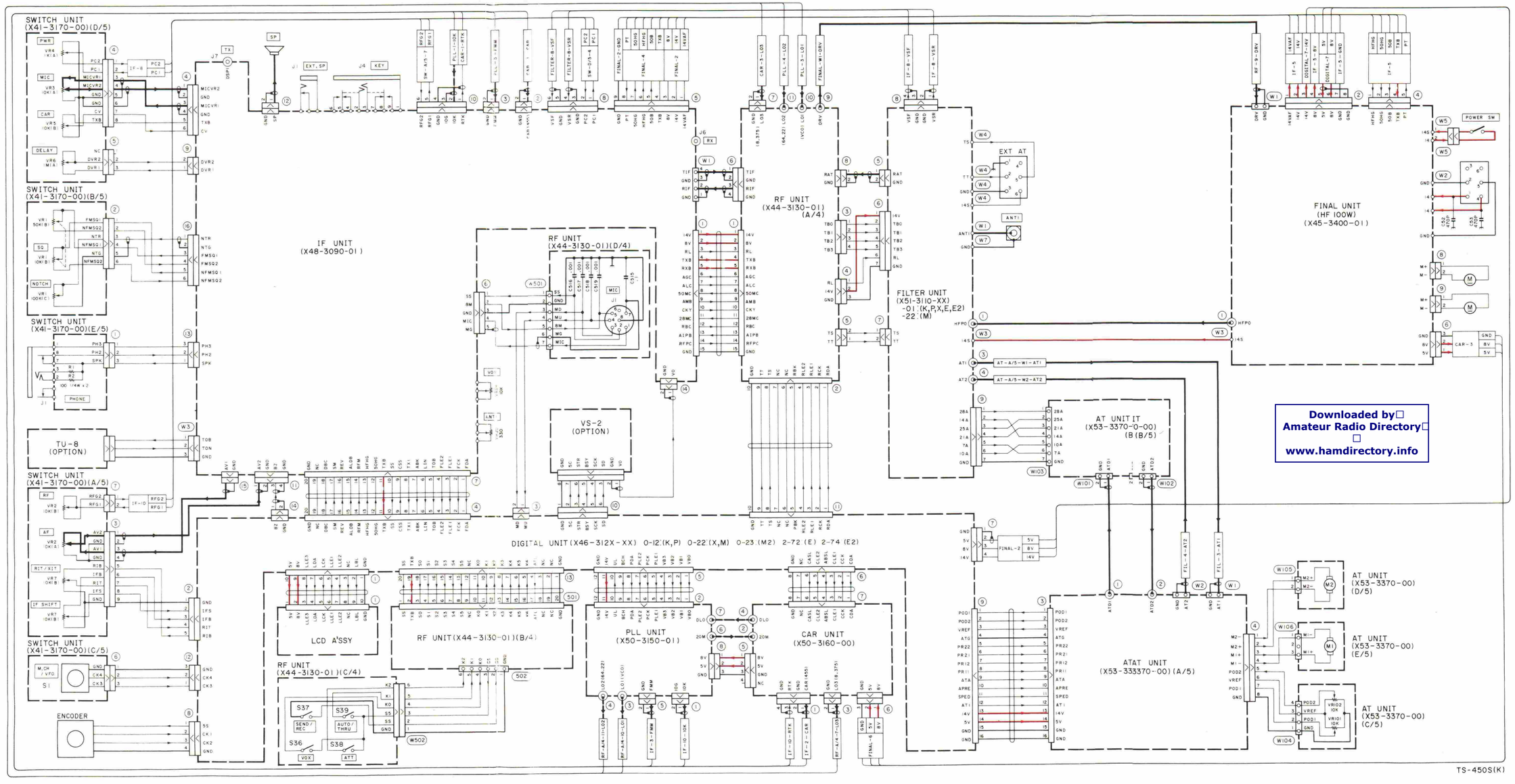

TS-690S SCHEMATIC DIAGRAM

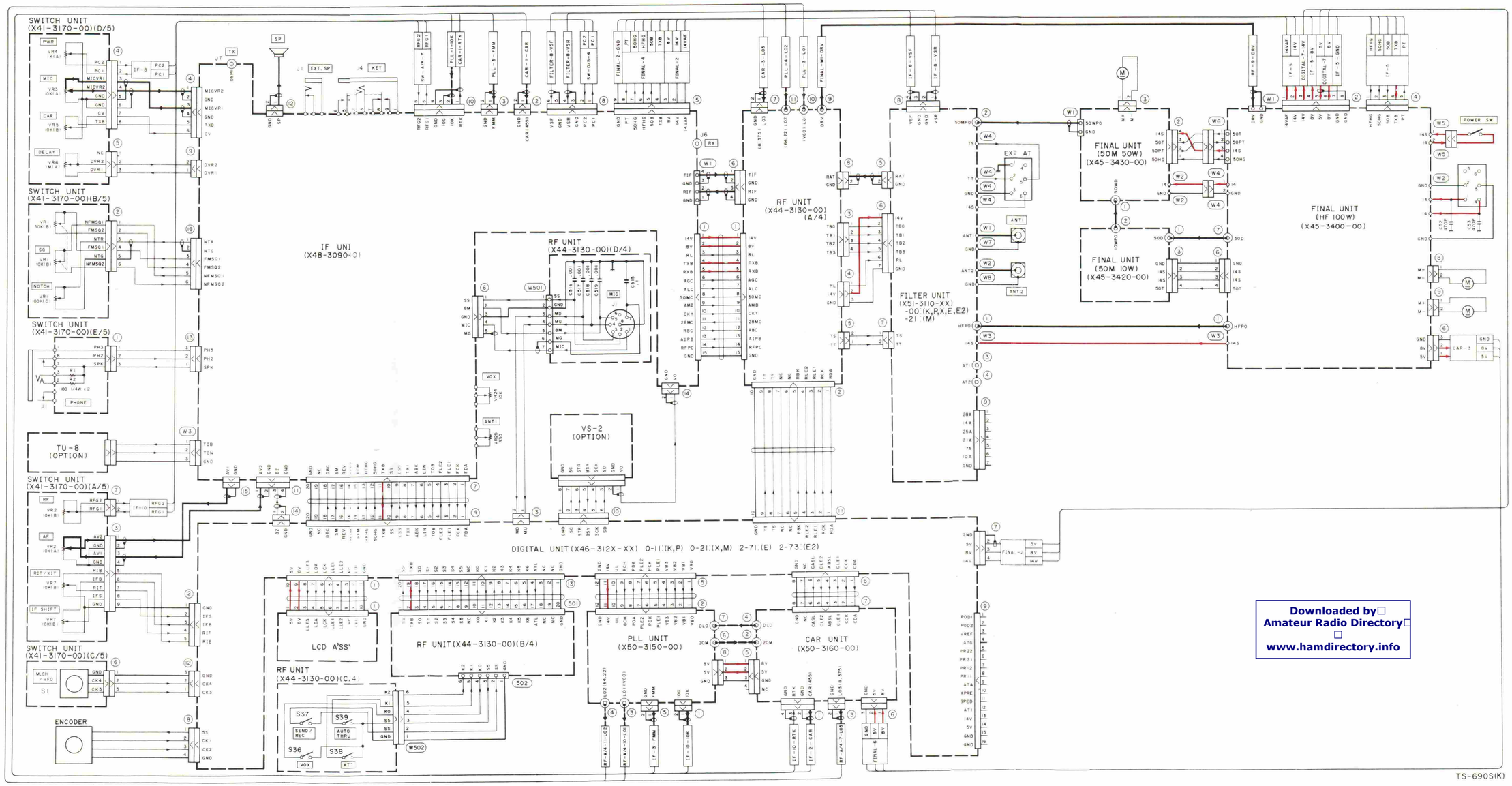

TS-450S/690S TS-450S/690S

BLOCK DIAGRAM

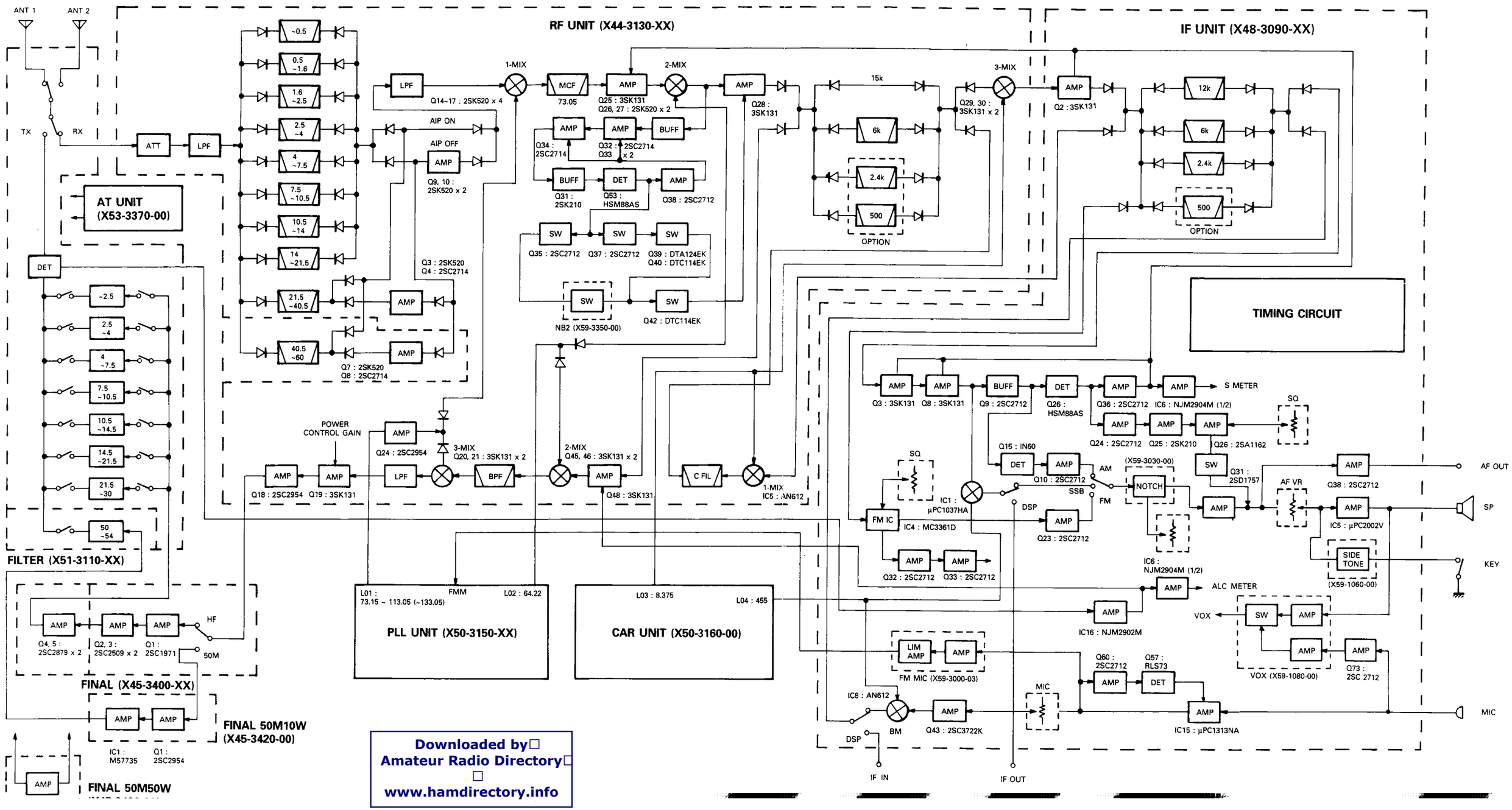

TS-450S/690S TS-450S/690S

LEVEL DIAGRAM

RX SECTION

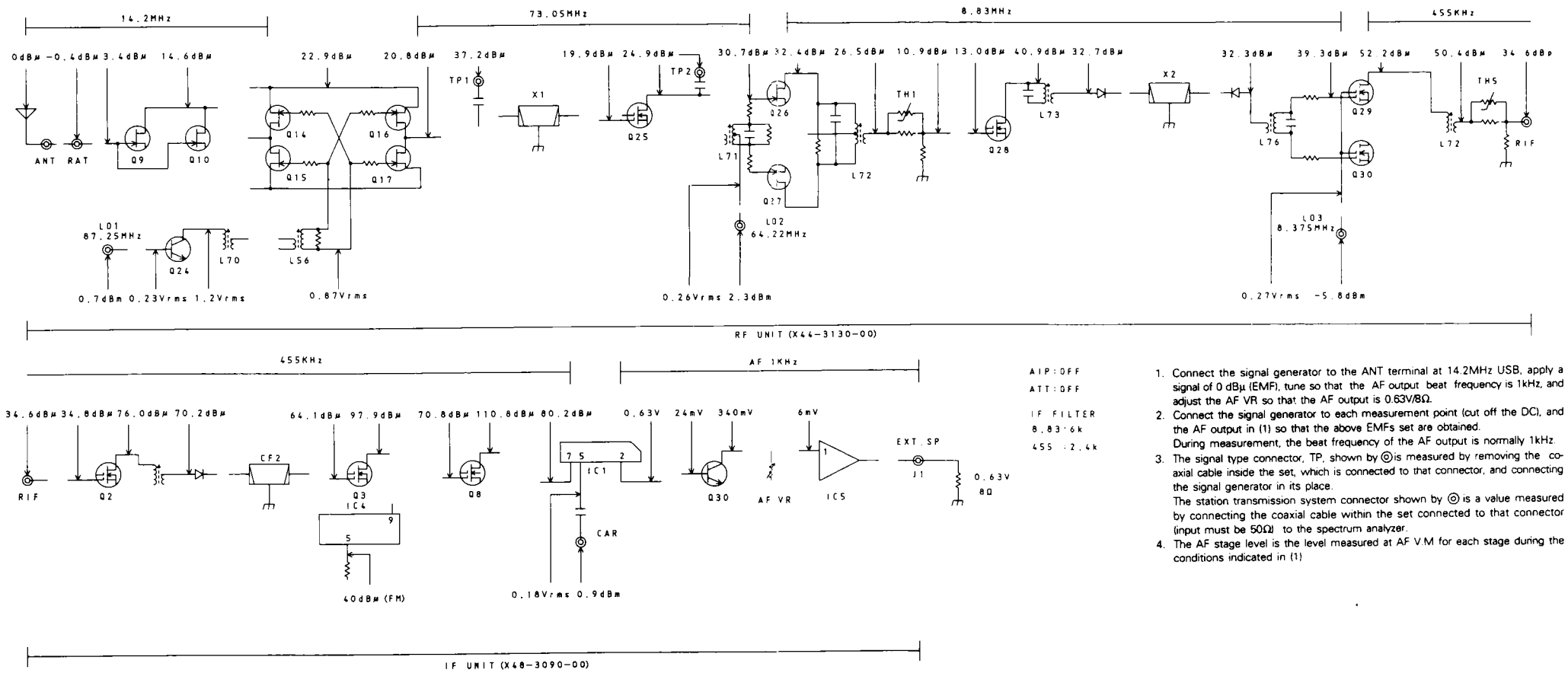

1. Connect the signal generator to the ANT terminal at 14.2MHz USB, apply a signal of 0 dBμ (EMF), tune so that the AF output beat frequency is 1kHz, and adjust the AF VR so that the AF output is 0.63V/8Ω.
2. Connect the signal generator to each measurement point (cut off the DC), and the AF output in (1) so that the above EMFs set are obtained.
   During measurement, the beat frequency of the AF output is normally 1kHz.
3. The signal type connector, TP, shown by ◎ is measured by removing the co-axial cable inside the set, which is connected to that connector, and connecting the signal generator in its place.
   The station transmission system connector shown by ◎ is a value measured by connecting the coaxial cable within the set connected to that connector (input must be 50Ω) to the spectrum analyzer.
4. The AF stage level is the level measured at AF V.M for each stage during the conditions indicated in (1).

TX SECTION

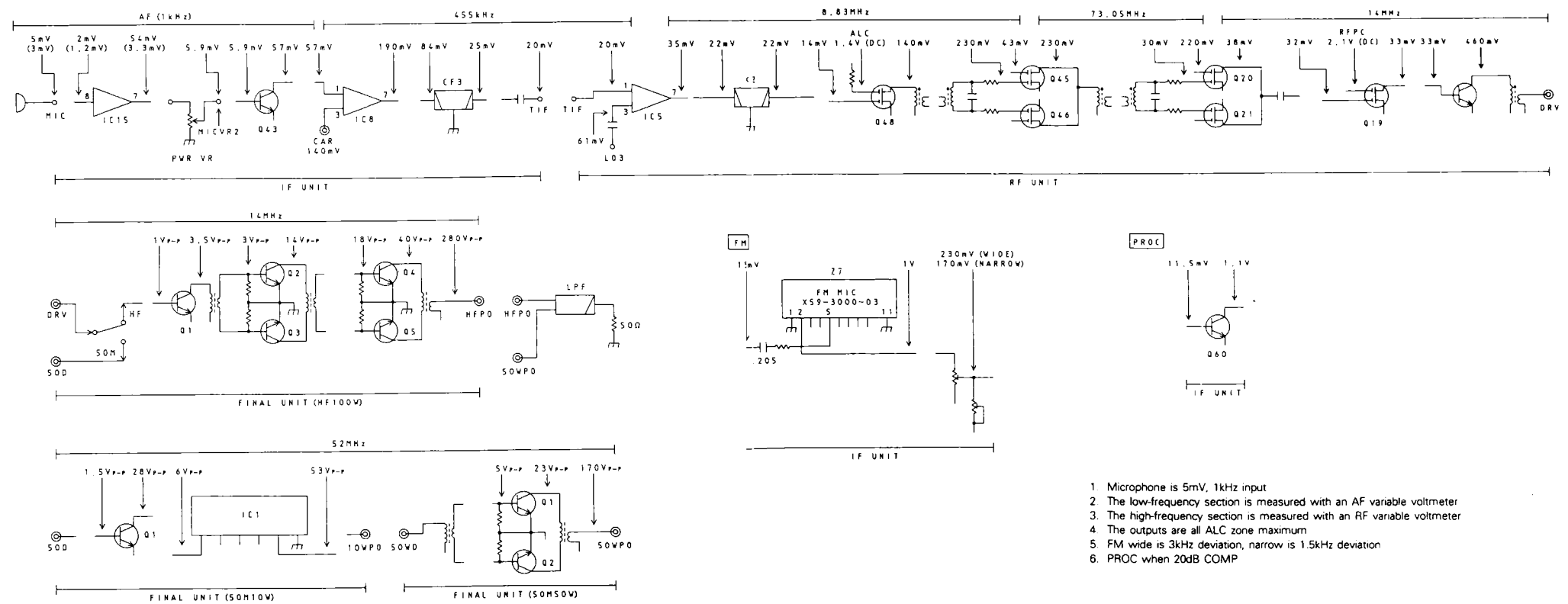

1. Microphone is 5mV, 1kHz input
2. The low-frequency section is measured with an AF variable voltmeter
3. The high-frequency section is measured with an RF variable voltmeter
4. The outputs are all ALC zone maximum
5. FM wide is 3kHz deviation, narrow is 1.5kHz deviation
6. PROC when 20dB COMP

PS-33/53 (DC POWER SUPPLY)

PS-33/53 External View

Specifications \ Model	PS-33	PS-53
Power requirement	120V AC ± 10%, 60Hz (K,P) *120/220~230V AC ± 10%, 50/60Hz (E,M) 240V AC ± 10%, 50/60Hz (T)	
Output voltage	13.8V DC (Reference)	
Rated output current	20.5A (25% duty cycle) 15A (50% duty cycle)	22.5A (25% duty cycle) 16A (50% duty cycle) 20.5A max. (Continuous operation for 1 hour)
Output voltage regulation	Within ±0.7V (at 120/220~230/240V AC ±10% variation with 15A) Within 0.7V (at load current variation from 2 to 15A)	Within ±0.7V (at 120/220~230/240V AC ±10% variation with 16A) Within 0.7V (at load current variation from 2 to 16A)
Ripple voltage	Less than 20mVrms (at 13.8V DC/15A)	Less than 20mVrms (at 13.8V DC/16A)
Power consumption	Approx. 500W (at 13.8V DC/20.5A)	Approx. 550W (at 13.8V DC/22.5A)
Dimensions (W x H x D) Dimensions in [ ] include projections	173 x 96 x 296 mm [173 x 107 x 322 mm] 6-13/16" x 3-25/32" x 11-21/32" [6-13/16" x 4-7/32" x 12-11/16"]	
Weight	Approx. 7.0kg (15.4lbs)	Approx. 6.9kg (15.2lbs)

Notes
Rating are subject to change without notice due to advancements in technology.
* : Switchable.

PS-33/53 Adjustment

- **Voltage setting**

1. Connect a load, pass a current of 15A (PS-33) or 20A (PS-53), and adjust the output voltage to 13.8 ± 0.4V with VR1.
2. Make sure the output voltage is 16V or less when there is no load.

- **Overcurrent protection**

1. Switch the power off.
2. Connect a 0.1Ω, 10-W resistor to the output pin.
3. Switch the power on, and adjust the voltage across the resistor to 0.15V with VR2.

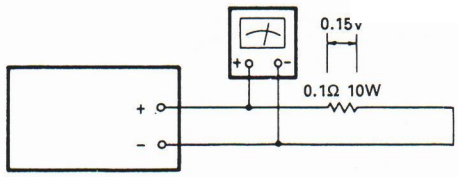

PS-33/53 (DC POWER SUPPLY)

PS-33/53 Packing

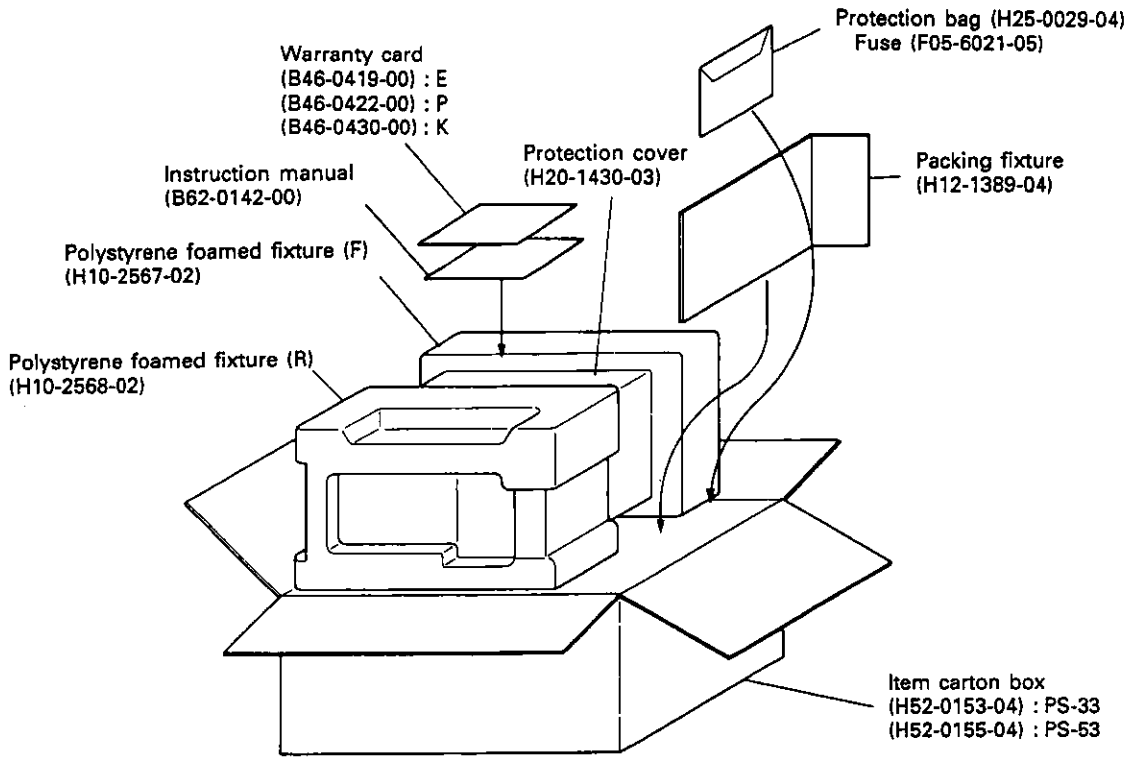

PS-33/53 (DC POWER SUPPLY)

× New Parts
Parts without Parts No. are not supplied.
Les articles non mentionnes dans le Parts No. ne sont pas fournis.
Teile ohne Parts No. werden nicht geliefert.

PS-33/53 Parts List

Ref. No. 参照番号	Address 位置	New Parts 新	Parts No. 部品番号	Description 部品名／規格	Destination 仕向	Remarks 備考
			PS-33			
		*	A01-2034-02	METALLIC CABINET(UPPER)		
		*	A01-2035-02	METALLIC CABINET(LOWER)	KTP	
		*	A01-2036-02	METALLIC CABINET(LOWER)	EM	
			A23-1507-03	REAR PANEL	P	
			A23-1522-03	REAR PANEL	TE	
		*	A62-0119-03	PANEL		
		*	A82-0006-03	REAR PANEL	K	
		*	A82-0007-03	REAR PANEL	P	
			B41-0659-14	CAUTION LABEL(LA)	KP	
			B41-0660-04	CAUTION LABEL(LA)	KP	
			B42-2454-04	LABEL(CARTON BOX)		
			B42-3343-04	LABEL(S/NO.)		
			B42-3346-04	LABEL(FUSE)	K	
			B42-3349-04	LABEL(120/230V)	E	
		*	B42-3354-04	LABEL(FUSE,PCB)	TEM	
			B42-3355-04	LABEL(GND)	TEP	
			B42-3374-04	LABEL(120/220V)	M	
			B46-0419-00	WARRANTY CARD	E	
			B46-0422-00	WARRANTY CARD	P	
			B46-0430-00	WARRANTY CARD	K	
		*	B62-0142-00	INSTRUCTION MANUAL		
		*	B72-0226-04	NAME PLATE(120V)	KP	
		*	B72-0227-04	NAME PLATE(120/230-330V)	EM	
		*	B72-0228-04	NAME PLATE(240V)	T	
C1 -4			CK45F1H103Z	CERAMIC 0.010UF Z		
C5 ,6			C90-2034-05	ELECTRO 22000UF 25WV		
C7			CK45F1H473Z	CERAMIC 0.047UF Z		
C8			CK45F1H103Z	CERAMIC 0.010UF Z		
			E20-0284-05	TERMINAL PLATE		
⚠			E30-0602-05	AC CORD	T	
⚠			E30-0974-05	AC CORD	M	
⚠			E30-2120-05	AC CORD	K	
⚠			E30-2125-05	AC CORD	P	
⚠			E30-2153-05	AC CORD	E	
			E31-3373-15	CONNECTING WIRE(TR(E))		
			E31-3374-05	CONNECTING WIRE(B-TERMINAL(+)		
			E31-3375-05	CONNECTING WIRE(B-TERMINAL(-)		
			E31-3376-05	CONNECTING WIRE(B-ELECTRO(-)		
			E31-3377-05	CONNECTING WIRE(CN3)		
			E31-3378-15	CONNECTING WIRE(FAN MOTOR)		
			E31-3379-05	CONNECTING WIRE(TR(B)-CN1)		
⚠			E33-1827-10	FINISHED WIRE SET	TP	
		*	E33-1954-05	FINISHED WIRE SET	K	
		*	E33-1955-05	FINISHED WIRE SET	EM	
			F01-0962-13	HEAT SINK		
⚠			F05-4024-05	FUSE(4A)	TEM	
⚠			F05-6021-05	FUSE(6A,ACSY)	EM	
⚠			F05-6021-05	FUSE(6A)	KP	
M1			F09-0423-15	FAN		
			F29-0436-04	INSULATOR(TRANSISTOR)		

L:Scandinavia K:USA P:Canada
Y:PX(Far East, Hawaii) T:England E:Europe
Y:AAFES(Europe) X:Australia M:Other Areas

⚠ indicates safety critical components.

PS-33/53 (DC POWER SUPPLY)

*New Parts
Parts without Parts No. are not supplied.
Les articles non mentionnes dans le Parts No. ne sont pas fournis.
Telle ohne Parts No. werden nicht gellefert.

	Ref. No. 参照番号	Address 位置	New Parts 新	Parts No. 部品番号	Description 部品名／規格	Destination 仕向	Remarks 備考
				H10-2567-02	POLYSTYREN FOAMED FIXTURE(F)		
				H10-2568-02	POLYSTYREN FOAMED FIXTURE(R)		
				H12-1389-04	PACKING FIXTURE		
				H20-1430-03	PROTECTION COVER		
				H25-0029-04	PROTECTION BAG(FUSE)		
				H25-0105-04	PROTECTION BAG(AC CORD)		
			*	H52-0153-04	ITEM CARTON BOX		
				J02-0323-05	FOOT(REAR)		
				J02-0442-04	FOOT(FRONT)		
				J02-0443-04	FOOT(SUB)		
⚠				J13-0033-15	FUSE HOLDER	K	
				J21-4135-04	LEAD HOLDER(PANEL)		
				J21-4179-04	MOUNTING HARDWARE		
			*	J21-4365-03	MOUNTING HARDWARE		
⚠				J42-0024-15	BUSHING	KP	
⚠				J42-0083-05	BUSHING(AC)	M	
⚠				J42-0085-05	BUSHING(AC)	TE	
⚠				J61-0307-05	WIRE BAND		
				K29-4636-04	KNOB		
⚠	T1			L01-8442-05	POWER TRANSFOMER	T	
⚠	T1		*	L07-1014-05	POWER TRANSFOMER(120V)	KP	
⚠	T1		*	L07-1015-05	POWER TRANSFOMER(115/230V)	EM	
				N09-0372-04	SCREW(THERMISTOR)		
				N09-0669-05	SCREW(GND)	TEP	
				N09-2033-04	SCREW(TRANSISTOR)		
				N14-0535-04	NUT(TRANSISTOR)		
				N16-0040-46	SPLING WASHER(DIODE)		
				N19-0642-04	FLAT WASHER(TRANSISTOR)		
				N30-3004-46	PAN HEAD MACHIN SCREW		
				N30-4018-46	PAN HEAD MACHIN SCREW(DIODE)		
				N35-3006-41	BINDING HEAD MACHINE SCREW		
				N35-3008-41	BINDING HEAD MACHINE SCREW		
				N35-4006-41	BINDING HEAD MACHINE SCREW		
				N35-4006-41	BINDING HEAD MACHINE SCREW		
				N50-3008-41	BINDING HEAD TAPTITE SCREW	EM	
				N87-3006-41	BRAZIER HEAD TAPTITE SCREW		
				N87-3006-46	BRAZIER HEAD TAPTITE SCREW		
				N87-3008-45	BRAZIER HEAD TAPTITE SCREW		
				N87-3008-46	BRAZIER HEAD TAPTITE SCREW		
				N87-3014-46	BRAZIER HEAD TAPTIPE SCREW		
				N88-3008-46	FLAT HEAD TAPTITE SCREW		
⚠	S1			S40-1416-05	PUSH SWITCH		
⚠	S2			S31-2126-05	SLIDE SWITCH	EM	
	D1			S25VB10	DIODE		
	D2			SLP144B	DIODE		
⚠	Q1 ,2			2N5885	TRANSISTOR		
				X43-3030-01	POWER SUPPLY UNIT		
					PS-53		
			*	A01-2037-02	CASE(UPPER)		
			*	A01-2038-02	CASE(LOWER)	KTP	
			*	A01-2039-02	CASE(LOWER)	EM	

L:Scandinavia K:USA P:Canada
Y:PX(Far East, Hawaii) T:England E:Europe
Y:AAFES(Europe) X:Australia M:Other Areas

⚠ indicates safety critical components.

PS-33/53 (DC POWER SUPPLY)

* New Parts
Parts without Parts No. are not supplied.
Les articles non mentionnes dans le Parts No. ne sont pas fournis.
Teile ohne Parts No. werden nicht geliefert.

Ref. No. 参照番号	Address 位置	New Parts 新	Parts No. 部品番号	Description 部品名／規格	Destination 仕向	Remarks 備考
			A23-1507-03	REAR PANEL	M	
			A23-1522-03	REAR PANEL	TE	
		*	A62-0120-03	PANEL		
			A82-0006-03	REAR PANEL	K	
			A82-0007-03	REAR PANEL	P	
			B41-0659-14	LABEL(LA)	KP	
			B41-0660-04	LABEL(LA)	KP	
			B42-2454-04	LABEL(ITEM CARTON BOX)		
			B42-3343-04	LABEL(S/NO)		
		*	B42-3354-04	LABEL(FUSE,PCB)	TEM	
			B42-3355-04	LABEL(GND)	TEP	
			B42-3374-04	LABEL(120/220V)	M	
		*	B42-3446-04	LABEL(FUSE)	K	
			B42-3449-04	LABEL(120/230V)	E	
			B46-0419-00	WARRANTY CARD	E	
			B46-0422-00	WARRANTY CARD	P	
			B46-0430-00	WARRANTY CARD	K	
		*	B62-0142-00	INSTRUCTION MANUAL		
		*	B72-0230-04	NAME PLATE(120V)	KP	
		*	B72-0231-04	NAME PLATE(120/220-230V)	EM	
		*	B72-0232-04	NAME PLATE(240V)	T	
C1 -4			CK45F1H103Z	CERAMIC 0.010UF Z		
C5 ,6			C90-2034-05	ELECTRO 22000UF 25WV		
C7			CK45F1H473Z	CERAMIC 0.047UF Z		
C8			CK45F1H103Z	CERAMIC 0.010UF Z		
			E20-0284-05	TERMINAL PLATE		
⚠			E30-0602-05	AC CORD	T	
⚠			E30-0974-05	AC CORD	M	
⚠			E30-2120-05	AC CORD	K	
⚠			E30-2125-05	AC CORD	P	
⚠			E30-2153-05	AC CORD	E	
			E31-3373-15	CONNECTING WIRE(TR(E)		
			E31-3374-05	CONNECTING WIRE(B-TERMINAL(+)		
			E31-3375-05	CONNECTING WIRE(G-TERMINAL(-)		
			E31-3376-05	CONNECTING WIRE(G-ERECTRO(-)		
			E31-3377-05	CONNECTING WIRE(CN3)		
			E31-3378-15	CONNECTING WIRE(FAN MOTOR)		
			E31-3379-05	CONNECTING WIRE(TR(B)-CN1		
⚠			E33-1825-10	FINISHED WIRE SET	TP	
		*	E33-1952-05	FINISHED WIRE SET	K	
		*	E33-1953-05	FINISHED WIRE SET	EM	
			F01-0962-13	HEAT SINK		
			F29-0436-04	INSULATOR(TRANSISTOR)		
⚠ F1			F05-4024-05	FUSE(4A)	TEM	
⚠			F05-6021-05	FUSE(6A)	KP	
⚠			F05-6021-05	FUSE(6A,ACSY)	EM	
M1			F09-0423-15	FAN		
			H10-2567-02	POLYSTYREN FOAMED FIXTURE(F)		
			H10-2568-02	POLYSTYREN FOAMED FIXTURE(R)		
			H12-1389-04	PACKING FIXTURE		
			H20-1430-03	PROTECTION COVER		
			H25-0029-04	PROTECTION BAG(FUSE)		

L:Scandinavia K:USA P:Canada
Y:PX(Far East, Hawaii) T:England E:Europe
Y:AAFES(Europe) X:Australia M:Other Areas

⚠ indicates safety critical components.

TS-450S/690S

PS-33/53 (DC POWER SUPPLY)

* New Parts
Parts without Parts No. are not supplied.
Les articles non mentionnes dans le Parts No. ne sont pas fournis.
Teile ohne Parts No. werden nicht geliefert.

	Ref. No. 参照番号	Address 位置	New Parts 新	Parts No. 部品番号	Description 部品名／規格	Destination 仕向	Remarks 備考
				H25-0105-04	PROTECTION BAG(AC CORD)		
			*	H52-0155-04	ITEM CARTON BOX		
				J02-0323-05	FOOT(REAR)		
				J02-0442-04	FOOT(FRONT)		
				J02-0443-04	FOOT(SUB)		
⚠				J13-0033-15	FUSE HOLDER	K	
				J21-4135-04	LEAD HOLDER(PANEL)		
				J21-4179-04	MOUNTING HARDWARE		
				J21-4181-14	MOUNTING HARDWARE		
			*	J21-4365-03	MOUNTING HARDWARE		
⚠				J42-0024-15	CORD BUSHING	KP	
⚠				J42-0083-05	CORD BUSHING	M	
⚠				J42-0085-05	CORD BUSHING	TE	
⚠				J61-0307-05	WIRE BAND		
				K29-4636-04	KNOB		
⚠	T1			L01-8462-05	POWER TRANSFOMER	T	
⚠	T1			L01-8471-05	POWER TRANSFOMER(120V)	KP	
⚠	T1			L01-8475-05	POWER TRANSFOMER(115/230V)	EM	
				N09-0372-04	SCREW(THERMISTOR)		
				N09-0658-04	SCREW(MOTOR)		
				N09-0669-05	SCREW(GND)	TEP	
				N09-2033-04	SCREW(TRANSISTOR)		
				N14-0535-04	NUT(TRANSISTOR)		
				N16-0040-46	SPRING WASHER(DIODE)		
				N19-0642-04	FLAT WASHER(TRANSISTOR)		
				N30-3004-46	PAN HEAD MACHIN SCREW(HARDWARE		
				N30-4018-46	PAN HEAD MACHIN SCREW(DIODE)		
				N35-3006-41	BINDING HEAD MACHINE SCREW		
				N35-3008-41	BINDING HEAD MACHINE SCREW	EM	
				N87-3006-41	BRAZIER HEAD TAPTITE SCREW		
				N87-3006-46	BRAZIER HEAD TAPTITE SCREW		
				N87-3008-45	BRAZIER HEAD TAPTITE SCREW		
				N87-3008-46	BRAZIER HEAD TAPTITE SCREW		
				N87-3014-46	BRAZIER HEAD TAPTITE SCREW		
				N88-3008-46	FLAT HEAD TAPTITE SCREW(POW SW		
⚠	S1			S40-1416-05	PUSH SWITCH		
⚠	S2			S31-2126-05	SLIDE SWITCH	EM	
	D1			S25VB10	DIODE		
	D2			SLP144B	DIODE		
⚠	Q1 ,2			2N5885	TRANSISTOR		
				X43-3030-01	POWER SUPPLY UNIT		
	POWER SUPPLY UNIT (X43-3030-01)						
	C1 -3			CK45F1H103Z	CERAMIC 0.010UF Z		
	C4			CK45F1H473Z	CERAMIC 0.047UF Z		
	C5			CE04EW1C331M	ELECTRO 330UF 16WV		
	C6			CE04EW1A470M	ELECTRO 47UF 10WV		
	C7			CK45F1H103Z	CERAMIC 0.010UF Z		
	C8			CK45F1H473Z	CERAMIC 0.047UF Z		
	C9 -11			C90-0814-05	ELECTRO 4700UF 25WV		
	C12			CQ92M1H104K	MYLAR 0.10UF K		
	C13			CK45B1H102K	CERAMIC 1000PF K		

L:Scandinavia K:USA P:Canada
Y:PX(Far East, Hawaii) T:England E:Europe
Y:AAFES(Europe) X:Australia M:Other Areas

⚠ indicates safety critical components.

PS-33/53 (DC POWER SUPPLY)

* New Parts
Parts without Parts No. are not supplied.
Les articles non mentionnes dans le Parts No. ne sont pas fournis.
Teile ohne Parts No. werden nicht geliefert.

	Ref. No. 参照番号	Address 位置	New Parts 新	Parts No. 部品番号	Description 部品名／規格	Destination 仕向	Remarks 備考
⚠	C14			C91-0647-05	CERAMIC 0.01UF P		
⚠	C15 ,16			C91-1075-05	CERAMIC 470PF K		
	CN1 ,2			E40-3237-05	MINI CONNECTOR(2P)		
	CN3			E40-0470-05	PIN ASSY		
⚠				J13-0055-15	FUSE HOLDER		
				J31-0502-14	COLLAR (PCB)		
				J42-0428-05	BUSHING(PCB)		
	R1			RD14BB2C391J	RD 390 J 1/6W		
⚠	R2			R92-1202-05	FUSE R 2.2 J 2W		
	R3			RS14KB3F121J	FL-PROOF RS 120 J 3W		
	R4			RD14BB2C272J	RD 2.7K J 1/6W		
	R5			RD14BB2C102J	RD 1.0K J 1/6W		
	R6			RD14BB2C473J	RD 47K J 1/6W		
	R7 ,8			RS14KB3A1R0J	FL-PROOF RS 1.0 J 1W		
	R9			RD14BB2C182J	RD 1.8K J 1/6W		
	R10 ,11			RS14KB3A331J	FL-PROOF RS 330 J 1W		
	R12			RD14BB2C471J	RD 470 J 1/6W		
	R13			RD14BB2C472J	RD 4.7K J 1/6W		
	R14			RD14BB2C153J	RD 15K J 1/6W		
	R15			RS14KB2H471J	FL-PROOF RS 470 J 1/2W		
	R16			RD14BB2C123J	RD 12K J 1/6W		
	R17			RD14BB2C822J	RD 8.2K J 1/6W		
	R18			RD14BB2C333J	RD 33K J 1/6W		
	R19			RD14BB2C392J	RD 3.9K J 1/6W		
	R20			RS14KB3A820J	FL-PROOF RS 82 J 1W		
	R21			RD14BB2C223J	RD 22K J 1/6W		
	R22			RD14BB2C472J	RD 4.7K J 1/6W		
	VR1			R12-0094-05	TRIMMING POT.470		
	VR2			R12-6012-05	TRIMMING POT.470K		
	D1			1S1555	DIODE		
	D2 ,3			DSA3A1	DIODE		
	D4			UZ9.1BL	DIODE		
	D5			1S1555	DIODE		
	D7			UZ15BH	DIODE		
	D8			1S1555	DIODE		
	Q1			2SA562(Y)	TRANSISTOR		
	Q2 ,3			2SC2458(Y)	TRANSISTOR		
	Q4			2SB941(Q)	TRANSISTOR		
	Q5			2SC2458(Y)	TRANSISTOR		
	TH1			32D27	THERMISTOR		
	TH2			5TP41L	THERMISTOR		

L:Scandinavia K:USA P:Canada
Y:PX(Far East, Hawaii) T:England E:Europe
Y:AAFES(Europe) X:Australia M:Other Areas

⚠印は安全部品
⚠ indicates safety critical components.

PS-33/53 (DC POWER SUPPLY)

PS-33/53 PC Board View

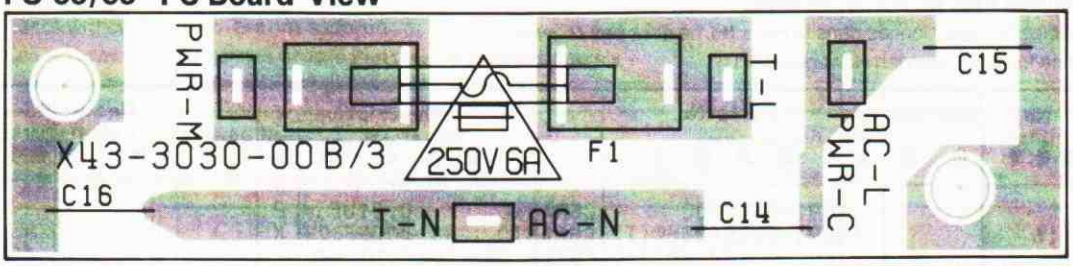

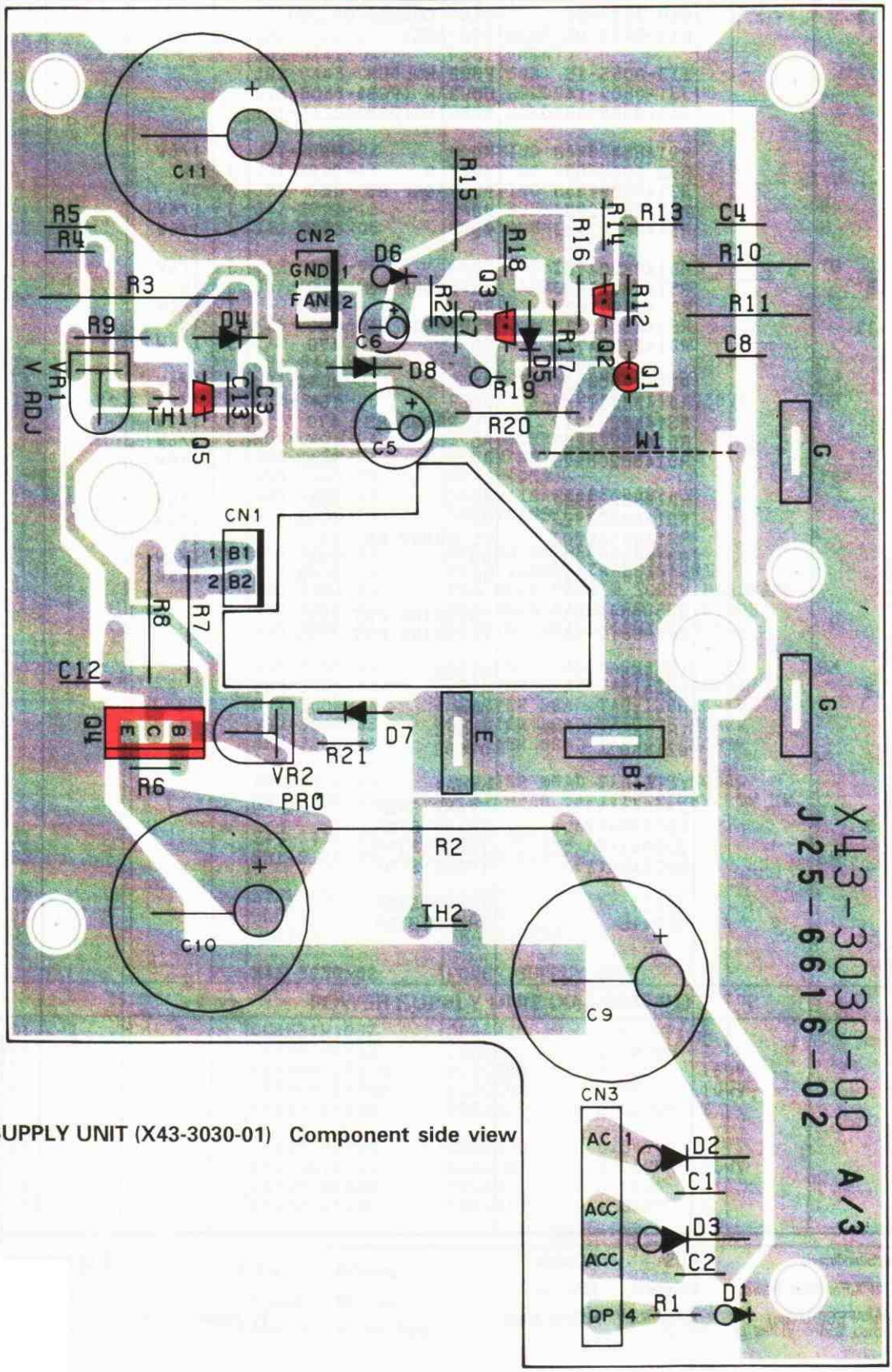

POWER SUPPLY UNIT (X43-3030-01) Component side view

2SA562

2N5885

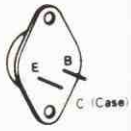

2SB941

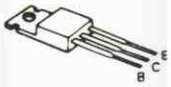

2SC2458

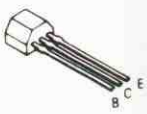

 TS-450S/690S

PS-33/53 (DC POWER SUPPLY)

PS-33/53 Schematic Diagram

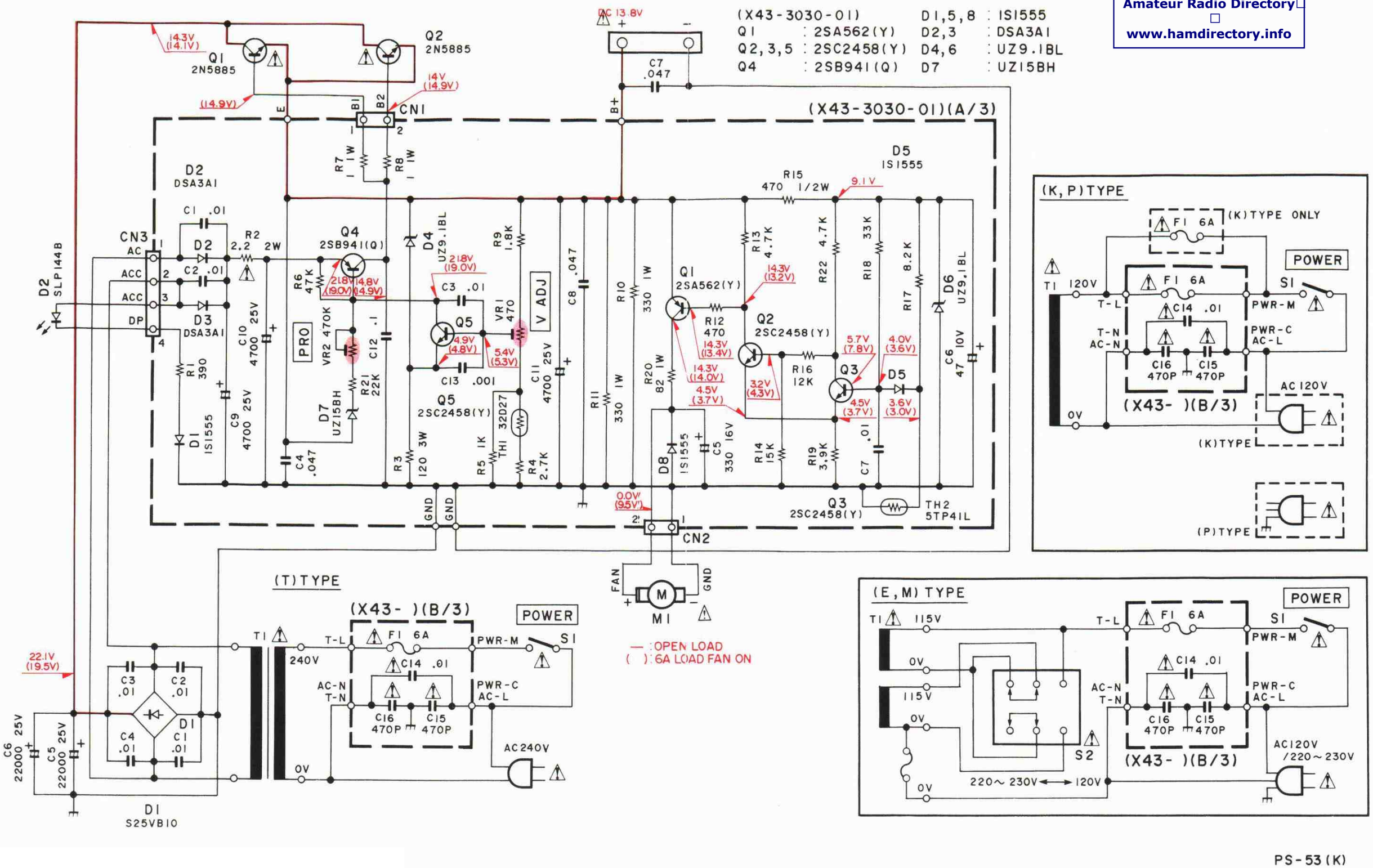

PG-2X (DC POWER CORD) / SO-2 (TCXO UNIT)

PG-2X External View

SO-2 External View

SO-2 Specifications

Oscillating frequency ..... 20 MHz
Temperature stability..... ±5 x 10^{-7} (–10°C to +50°C)
Frequency stability (Long term) ..... ±1 x 10^{-6}/year
Output ..... 1 V peak-to-peak (20 kΩ/5 pF)

SO-2 Parts List

Ref. No.	New	Parts No.	Description
		B50-8314-08	Instruction manual
		L77-1394-15	TCXO

TS-450S/690S

SP-23 (EXTERNAL SPEAKER)

SP-23 External View

SP-23 Specifications

Speaker used	7.5cm dia.
Rated input	1W
Impedance	8Ω
Frequency response	300Hz to 5kHz
Dimensions (mm)	123 (124) W x 96 (106) H x 235 (241) D
( ) : Projection included	
Weight	1.3kg

* New Parts
Parts without **Parts No.** are not supplied.
Les articles non mentionnes dans le **Parts No.** ne sont pas fournis.
Telle ohne **Parts No.** werden nicht gellefert.

SP-23 Parts List

Ref. No. 参照番号	Address 位置	New Parts 新	Parts No. 部品番号	Description 部品名／規格	Destination 仕向	Remarks 備考
				SP-23		
		*	A01-2042-03	METALLIC CABINET(TOP)		
		*	A01-2043-03	METALLIC CABINET(BOTTOM)		
			A23-1431-04	REAR PANEL		
		*	A62-0122-03	PANEL		
		*	B04-0414-04	MESH PLATE		
			B07-0613-14	SPEAKER RING		
			B39-0407-04	SPACER (FOOT)		
		*	B62-0154-00	INSTRUCTION MAMUAL		
		*	E20-0208-14	TERMINAL BOARD		
		*	E30-1629-15	SP CABLE		
			G53-0507-04	PACKING		
			H10-2513-02	POLYSTYRENE FOAMED FIXTURE(F)		
			H10-2514-12	POLYSTYRENE FORMED FIXTURE(R)		
			H12-0445-04	PACKING FIXTURE		
			H20-1407-03	PROTECTION COVER		
			H25-0077-03	PROTECTION BAG		
		*	H52-0170-04	ITEM CARTON BOX		
			J02-0323-05	FOOT		
			J02-0409-04	FOOT(SUB)		
			J21-1144-34	MOUNTING HARDWARE(SPEAKER)		
			J21-2573-04	MOUNTING HARDWARE(FOOT)		
			N15-1030-46	FLAT WASHER		
			N30-3008-46	PAN HEAD MACHINE SCREW		
			N35-3006-41	BINDING HEAD MACHINE SCREW		
			N87-3006-46	BRAZIER HEAD TAPTITE SCREW		
			N87-3008-46	BRAZIER HEAD TAPTITE SCREW		
			T07-0224-05	SPEAKER		

E: Scandinavia & Europe K: USA P: Canada W:Europe
U: PX(Far East, Hawaii) T: England M: Other Areas
UE : AAFES(Europe) X: Australia

⚠ indicates safety critical components.

VS-2 (VOICE SYNTHESIZER)

VS-2 PARTS LIST

Ref. No.	New Parts	Parts No.	Description
		VS-2	
		B50-8095-00	Instruction manual
		G13-0645-04	Cushion Accessary
		H01-8025-03	Item carton box
		H25-0029-04	Protection bag
		N32-2004-41	Flat head screw
		N35-2604-41	Bind head screw
		X42-3000-00	Accessary unit
		ACCESSARY UNIT (X42-3000-00)	
C6,7		CC73ECH1H202J	Chip C 2000pF J
C2,3,9		CC73FCH1H331J	Chip C 330pF J
C8		CC73FCH1H471J	Chip C 470pF J
C12		CE04CW1A330M	Electro 33µF 10WV
C1,5		CK73EB1E104K	Chip C 0.1µF K
C10		CK73EB1H473K	Chip C 0.047µF K
C13		C90-0503-05	Chip tan 0.068µF 35WV
C4,11		C92-0501-05	Chip tan 1.5µF 10WV
CN1		E40-5022-05	Pin ass'y (8P)
		J21-4146-04	Mounting hardware
X1		L78-0006-05	Ceramic oscillator
R3		RK73FB2A101J	Chip R 100 J 1/10W
R13		RK73FB2A102J	Chip R 1k J 1/10W
R1		RK73FB2A105J	Chip R 1M J 1/10W
R4,15		RK73FB2A153J	Chip R 15k J 1/10W
R10,14		RK73FB2A183J	Chip R 18k J 1/10W
R8,12		RK73FB2A472J	Chip R 4.7k J 1/10W
R2,5		RK73FB2A473J	Chip R 47k J 1/10W
R11		RK73FB2A682J	Chip R 6.8k J 1/10W
R6,7		RK73FB2A683J	Chip R 68k J 1/10W
R9		RK73FB2A822J	Chip R 8.2k J 1/10W
VR1		R12-3457-05	Trimming pot. 47k
S1		S31-1418-05	Slide switch
IC1		MN6401TRA	IC
IC2		NJM2904M	IC
IC3		TC74HC164FP	IC
IC3		HD74HC164FP	IC

VS-2 SCHEMATIC DIAGRAM

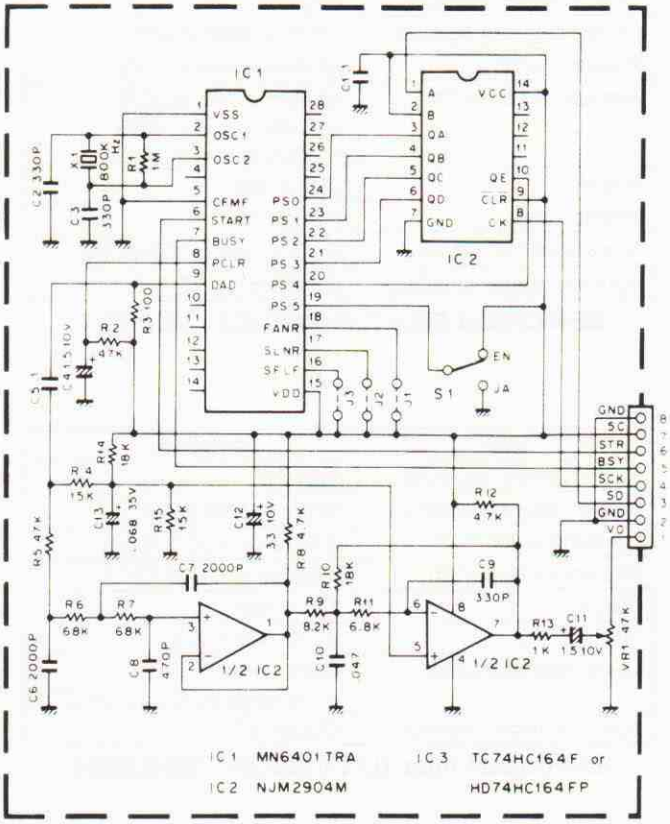

VS-2 PC BOARD VIEW

ACCESSARY UNIT (X42-3000-00)

Component side view

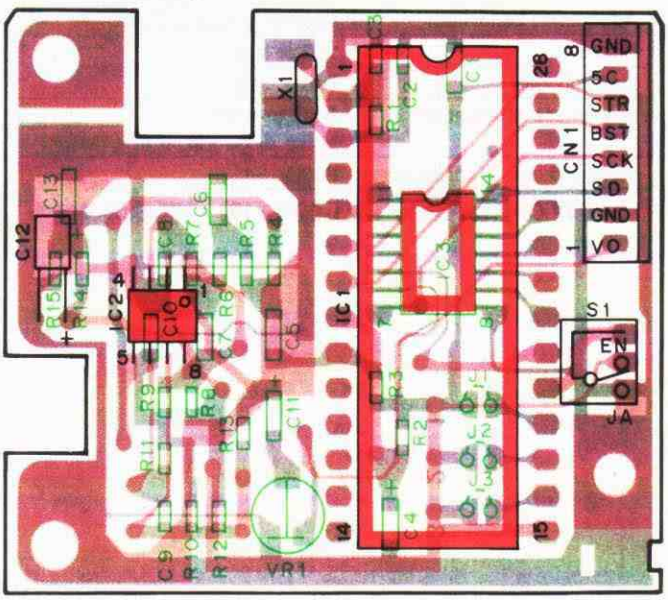

OPTION FILTER

Item	Rating
Nominal center frequency	8830kHz
Center frequency deviation	Within ±150Hz at 6dB
Passband width	±1.2kHz or more at 6dB
Attenuation bandwidth	±1.5kHz or less at 20dB ±2.2kHz or less at 60dB ±3.0kHz or less at 80dB
Ripple	2dB or less
Insertion loss	6dB or less
Guaranteed attenuation	80dB or more within ±1MHz
Input and output impedance	600Ω/15pF

SSB Crystal filter (L71-0418-05) : YK-88S-1

Item	Rating
Nominal center frequency	8830kHz
Center frequency deviation	Within ±150Hz at 6dB
Passband width	±900Hz or more at 6dB
Attenuation bandwidth	±1800Hz or less at 60dB
Ripple	2dB or less
Insertion loss	Within 3dB ± 2dB
Guaranteed attenuation	80dB or more in the range ±2.5kHz to ±1MHz
Input and output impedance	600Ω/15pF

SSB Crystal filter (L71-0406-05) : YK-88SN-1

Item	Rating
Nominal center frequency	8830kHz
Center frequency deviation	Within ±70Hz at 6dB
Passband width	±250Hz or more at 6dB
Attenuation bandwidth	±900Hz or less at 60dB
Ripple	2dB or less
Insertion loss	5dB ± 2dB
Guaranteed attenuation	80dB or more in the range ±2kHz to ±1MHz
Input and output impedance	600Ω/15pF

CW Crystal filter (L71-0236-15) : YK-88C-1

Item	Rating
Nominal center frequency	8830kHz
Center frequency deviation	Within ±50Hz at 6dB
Passband width	±125Hz or more at 6dB
Attenuation bandwidth	±600Hz or less at 60dB
Ripple	2dB or less
Insertion loss	Within 8dB ± 2dB
Guaranteed attenuation	80dB or more in the range ±2kHz to ±1MHz
Input and output impedance	600Ω/15pF

CW Crystal filter (L71-0407-05) : YK-88CN-1

Item	Rating
Nominal center frequency	455kHz
Center frequency deviation	Within ±50Hz at 6dB
Passband width	±250Hz or more at 6dB
Attenuation bandwidth	±425Hz or less at 60dB
Ripple	2dB or less
Insertion loss	6dB or less
Guaranteed attenuation	80dB or more within 100Hz to 454.4kHz 80dB or more within 456.6kHz to 2MHz
Input and output impedance	2kΩ/15pF

CW Crystal filter (L71-0238-25) :YG-455C-1

Item	Rating
Nominal center frequency	455kHz
Center frequency deviation	Within ±50Hz at 6dB
Passband width	±125Hz or more at 6dB
Attenuation bandwidth	±250Hz or less at 60dB
Ripple	2dB or less
Insertion loss	6dB or less
Guaranteed attenuation	80dB or more within 100Hz to 454.6kHz 80dB or more within 455.4kHz to 2MHz
Input and output impedance	2kΩ/15pF

CW Crystal filter (L71-0239-25) :YG-455CN-1

TU-8 (TONE UNIT)

TU-8 EXTERNAL VIEW

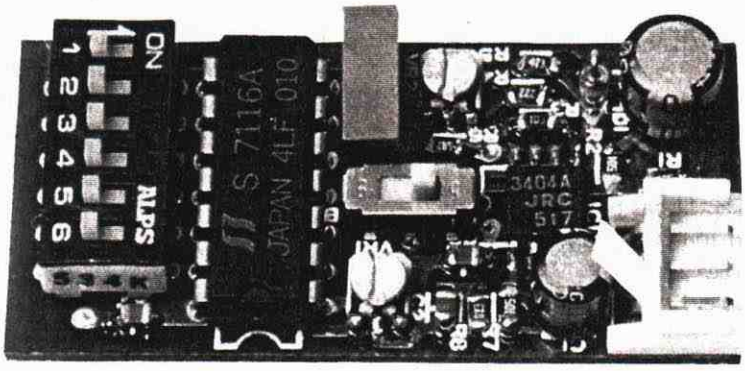

TU-8 SPECIFICATIONS

Frequency range	38CH in 67.0–250.3Hz and 1750Hz, 1800Hz
Frequency Deviation	Within ±0.5%
Max. Output Power	2.0Vrms±5% at 1800Hz/1.5kΩ
Operating temperature	–20°C to +60°C
Power Supply Voltage	8V±5%
Semi-conductors	ICs : 2 Diode : 1
Weight	Approx. 10 grams
Dimensions	45 mm W 22 mm D 8 mm H (without cushion, etc.)

TU-8 (TONE UNIT)

TU-8 CIRCUIT DISCRIPTION

The TU-8 is a tone unit designed for the repeater operation of the TS-140S/680S.

- **Outline**

1. A six position DIP switch (Fig. 1) has been provided to allow selection of the desired tone frequency, 40 different frequencies are available (See Table 1.).
   Use the DIP switch and Table 1 to select the desired tone frequency.

Freq. (Hz)	P1	P2	P3	P4	P5	P6	Freq. (Hz)	P1	P2	P3	P4	P5	P6
67.0	1	0	0	0	0	0	136.5	1	0	1	0	1	0
71.9	0	1	0	0	0	0	141.3	0	1	1	0	1	0
74.4	1	1	0	0	0	0	146.2	1	1	1	0	1	0
77.0	0	0	1	0	0	0	151.4	0	0	0	1	1	0
79.7	1	0	1	0	0	0	156.7	1	0	0	1	1	0
82.5	0	1	1	0	0	0	162.2	0	1	0	1	1	0
85.4	1	1	1	0	0	0	167.9	1	1	0	1	1	0
88.5	0	0	0	1	0	0	173.8	0	0	1	1	1	0
91.5	1	0	0	1	0	0	179.9	1	0	1	1	1	0
94.8	0	1	0	1	0	0	186.2	0	1	1	1	1	0
97.4	1	1	0	1	0	0	192.8	1	1	1	1	1	0
100.0	0	0	1	1	0	0	203.5	0	0	0	0	0	1
103.5	1	0	1	1	0	0	210.7	1	0	0	0	0	1
107.2	0	1	1	1	0	0	218.1	0	1	0	0	0	1
110.9	1	1	1	1	0	0	225.7	1	1	0	0	0	1
114.8	0	0	0	0	1	0	233.6	0	0	1	0	0	1
118.8	1	0	0	0	1	0	241.8	1	0	1	0	0	1
123.0	0	1	0	0	1	0	250.3	0	1	1	0	0	1
127.3	1	1	0	0	1	0	1750.0	1	1	1	1	0	1
131.8	0	0	1	0	1	0	1800.0	0	0	0	0	1	1

(1 : ON 0 : OFF)

Table 1 Program

Ex.) 88.5Hz switch position

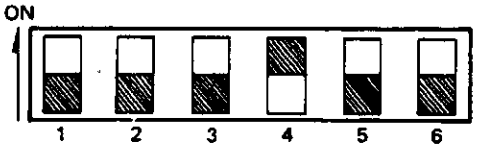

Fig. 1 DIP Switch

TU-8 ADJUSTMENT

- **Deviation adjustment**

The TU-8 has been present at factory for ±600Hz. The deviation is adjusted by with VR1 to Max. ±2kHz with the deviation potentiometer full clockwise when the TU-8 is installed on the TS-140S/680S.

2. Tone-burst[*1] or continuous[*2]tone selection :
   A switch is provided to allow selection of either the tone-burst or continuous tone mode.
   The burst duration can be adjusted by with VR2.

***1 Tone-burst mode :**
A tone will be generated for a brief period at the beginning of each transmission.

***2 Continuous-tone mode :**
A tone will be generated as long as the PTT switch is depressed. Since the tone is adjsted for a sub-audible level, this should not interfere with normal communications.

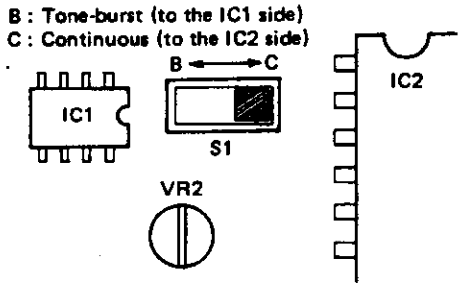

Fig. 2 Tone-burst or continuous-tone selection switch

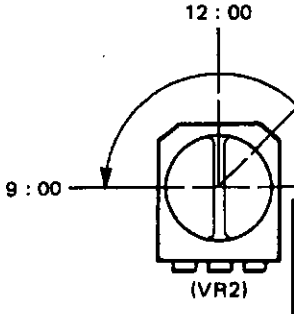

CW	TIME
9 : 00	Approx. 0.5 sec.
12 : 00	Approx. 2 sec.
13 : 30	Approx. 3.5 sec.
15 : 00	Continuous-tone

Table 2

Fig. 3 Burst time adjustment

TU-8 (TONE UNIT)

× New Parts
Parts without Parts No. are not supplied.
Les articles non mentionnes dans le Parts No. ne sont pas fournis.
Teile ohne Parts No. werden nicht geliefert.

TU-8 PARTS LIST

Ref. No. 参照番号	Address 位置	New Parts 新	Parts No. 部品番号	Description 部品名／規格	Destination 仕向	Remarks 備考
				TU-8		
-			X52-3000-00	TONE UNIT		
				TONE UNIT (X52-3000-00)		
C1			CE04CW1A220M	ELECTRO 22UF 10WV		
C2 -4			CK73FB1E103K	CHIP C 0.010UF K		
C5			CE04CW1A470M	ELECTRO 47UF 10WV		
C6			CC45SL1H102J	CERAMIC 1000PF J		
L1			L40-2211-17	SMALL FIXED INDUCTOR		
X1			L78-0018-05	CERAMIC OSCILLATOR (3.58MHZ)		
R1 ,2			RK73FB2A105J	CHIP R 1.0M J 1/10W		
R3			RK73FB2A103J	CHIP R 10K J 1/10W		
R4			RK73FB2A222J	CHIP R 2.2K J 1/10W		
R5			RK73FB2A473J	CHIP R 47K J 1/10W		
R6			RK73FB2A682J	CHIP R 6.8K J 1/10W		
R7			RK73FB2A105J	CHIP R 1.0M J 1/10W		
R8			RK73FB2A823J	CHIP R 82K J 1/10W		
VR1 ,2			R12-4418-05	TRIMMING POT (50K)		
S1			S31-1411-05	SLIDE SWITCH (3P)		
S2			S59-6401-05	DIP SWITCH (SSGM16 6P)		
D1			1SS133	DIODE		
IC1			NJM3404AM	IC(OP AMP X2)		
IC2			S7116A	IC(TONE ENCODER)		

TU-8 (TONE UNIT)

TU-8 PC BOARD VIEW

TONE UNIT (X52-3000-00) Component side view

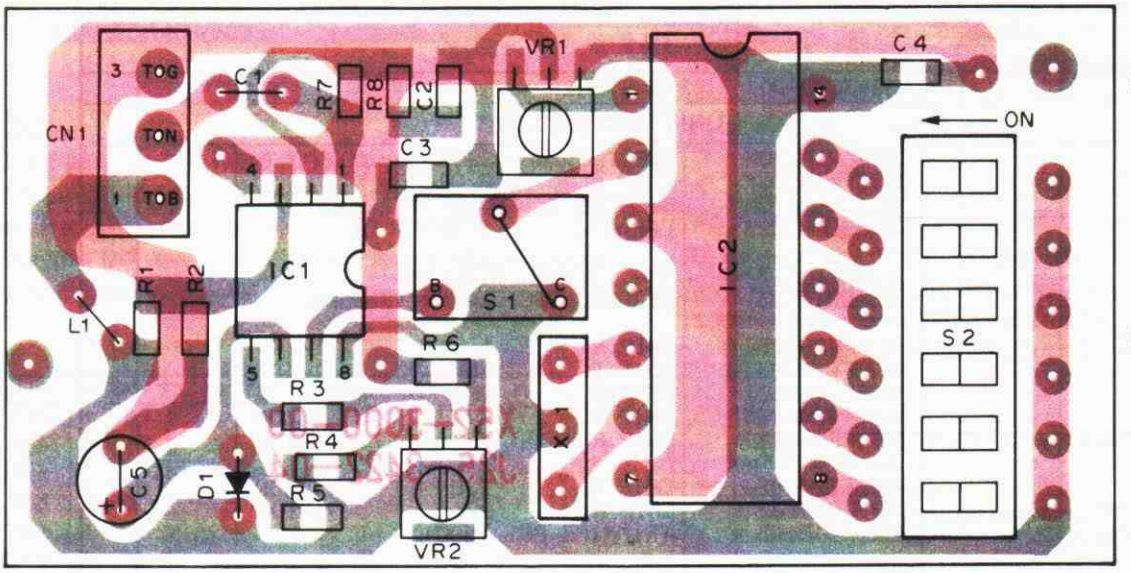

NJM3404AM

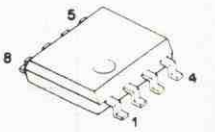

S7116A

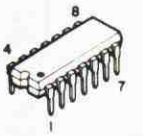

TU-8 SCHEMATIC DIAGRAM

TONE UNIT (X52-3000-00)

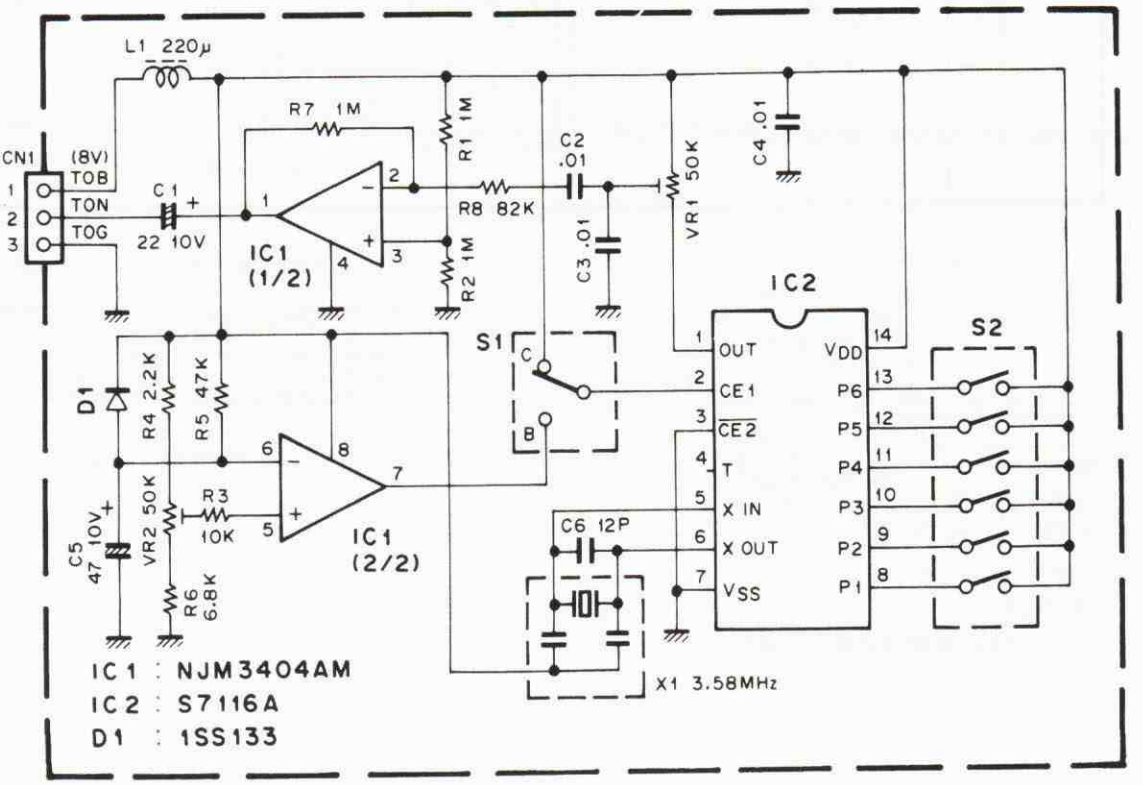

SPECIFICATIONS (TS-450S)

					Specifications
General	Mode				J3E (LSB, USB), A1A (CW), A3E (AM), F3E (FM), F1A (FSK)
	Memory Channels				100
	Antenna impedance				50Ω (With AT-450 antenna tuner 20 to 150Ω)
	Power requirement				12 to 16V DC (13.8V DC reference)
	Grounding				Negative
	Current drain	Receive mode with no input signal			2A
		Transmit mode			20.5A
	Operating temperature				-10°C to +50°C (+14°F to +122°F)
	Frequency stability				Less than ±10PPM
	Frequency accuracy				Less than ±10PPM
	Dimensions (W x H x D) (Projections included)				270 x 96 x 305 mm (10-5/8" x 3-25/32" x 12-1/64") (280 x 107 x 340 mm) (11-1/32" x 4-1/4" x 13-25/64")
	Weight	With AT unit			7.5kg (16.5lbs)
		Without AT unit			6.3kg (13.9lbs)
Transmitter	Frequency range	160m band			1.8 to 2.0MHz
		80m band			3.5 to 4.0MHz
		40m band			7.0 to 7.3MHz
		30m band			10.1 to 10.15MHz
		20m band			14.0 to 14.35MHz
		17m band			18.068 to 18.168MHz
		15m band			21.0 to 21.45MHz
		12m band			24.89 to 24.99MHz
		10m band			28.0 to 29.7MHz
	Output power (Without AT)	1.9 to 28MHz	SSB, CW, FSK, FM	MAX	100W
				MIN	Less than 20W
			AM	MAX	40W
				MIN	Less than 10W
	Modulation		SSB		Balanced modulation
			FM		Reactance modulation
			AM		Low level modulation
	Spurious radiation				Less than -50dB
	Carrier suppression (with 1.5kHz reference)				More than 40dB
	Unwanted sideband suppression (with 1.5kHz reference)				More than 40dB
	Maximum frequency deviation (FM)				Less than ±5kHz
	Frequency response (-6dB)				400 to 2600Hz
	XIT variable range	10Hz step			More than ±1.1kHz
		20Hz step			More than ±2.2kHz
	Microphone impedance				600Ω

SPECIFICATIONS (TS-450S)

				Specifications
Receiver	Circuitry			Triple conversion superheterodyne
	Frequency range			500kHz to 30MHz
	Intermediate frequency			1st : 73.05MHz, 2nd : 8.83MHz, 3rd : 455kHz
	Sensitivity	SSB, CW, FSK (at 10dB (S+N)/N)	500kHz to 1.62MHz*	Less than 4μV
			*1.62MHz to 21.5MHz	Less than 0.2μV
			21.5MHz to 30MHz	Less than 0.13μV
		AM (at 10dB (S+N)/N)	500kHz to 1.62MHz*	Less than 32μV
			*1.62MHz to 21.5MHz	Less than 2μV
			21.5MHz to 30MHz	Less than 1.3μV
		FM (at 12dB SINAD)	28MHz to 30MHz	Less than 0.25μV
	Selectivity	SSB, CW, FSK		–6dB : More than 2.2kHz, –60dB : Less than 4.4kHz
		AM		–6dB : More than 5kHz, –50dB : Less than 18kHz
		FM		–6dB : More than 12kHz, –50dB : Less than 25kHz
	Image ratio			More than 70dB
	1st IF rejection			More than 70dB
	Notch filter attenuation			More than 20dB
	RIT variable range	10Hz step		More than ±1.1kHz
		20Hz step		More than ±2.2kHz
	Squelch sensitivity	SSB, CW, FSK, AM	500kHz to 1.62MHz*	Less than 20μV
			*1.62MHz to 30MHz	Less than 2μV
		FM	28MHz to 30MHz	Less than 0.25μV
	Output			1.5W across 8Ω load (10% distortion)
	Output load impedance			8Ω

Notes
1. Circuit and ratings are subject to change without notice due to advancements in technology.
2. Remember to keep the transmit output power within the power limitations of your license.
3. * : The U.S.A. version is 1.705MHz.

SPECIFICATIONS (TS-690S)

					Specifications
General	Mode				J3E (LSB, USB), A1A (CW), A3E (AM), F3E (FM), F1A (FSK)
	Memory Channels				100
	Antenna impedance				50Ω
	Power requirement				12 to 16V DC (13.8V DC reference)
	Grounding				Negative
	Current drain	Receive mode with no input signal			2A
		Transmit mode			20.5A
	Operating temperature				−10°C to +50°C (+14°F to +122°F)
	Frequency stability				Less than ±10PPM
	Frequency accuracy				Less than ±10PPM
	Dimensions (W x H x D) (Projections included)				270 x 96 x 328 mm (10-5/8" x 3-25/32" x 12-29/32") (280 x 107 x 351 mm) (11-1/32" x 4-1/4" x 13-13/16")
	Weight	Without AT unit			6.9kg (15.2lbs)
Transmitter	Frequency range	160m band			1.8 to 2.0MHz
		80m band			3.5 to 4.0MHz
		40m band			7.0 to 7.3MHz
		30m band			10.1 to 10.15MHz
		20m band			14.0 to 14.35MHz
		17m band			18.068 to 18.168MHz
		15m band			21.0 to 21.45MHz
		12m band			24.89 to 24.99MHz
		10m band			28.0 to 29.7MHz
		6m band			50.0 to 54.0MHz
	Output power (Without AT)	1.9 to 28MHz	SSB, CW, FSK, FM	MAX	100W
				MIN	Less than 20W
			AM	MAX	40W
				MIN	Less than 10W
		50MHz	SSB, CW, FSK, FM	MAX	50W
				MIN	Less than 10W
			AM	MAX	20W
				MIN	Less than 10W
	Modulation		SSB		Balanced modulation
			FM		Reactance modulation
			AM		Low level modulation
	Spurious radiation				HF : Less than −50dB, 50MHz : Less than −60dB
	Carrier suppression (with 1.5kHz reference)				More than 40dB
	Unwanted sideband suppression (with 1.5kHz reference)				More than 40dB
	Maximum frequency deviation (FM)				Less than ±5kHz
	Frequency response (−6dB)				400 to 2600Hz
	XIT variable range	10Hz step			More than ±1.1kHz
		20Hz step			More than ±2.2kHz
	Microphone impedance				600Ω

TS-450S/690S

SPECIFICATIONS (TS-690S)

				Specifications
Receiver	Circuitry			Triple conversion superheterodyne
	Frequency range			HF : 500kHz to 30MHz, 50MHz : 50 to 54MHz
	Intermediate frequency			1st : 73.05MHz, 2nd : 8.83MHz, 3rd : 455kHz
	Sensitivity	SSB, CW, FSK (at 10dB (S+N)/N)	500kHz to 1.62MHz*	Less than 4μV
			*1.62MHz to 21.5MHz	Less than 0.2μV
			21.5MHz to 30MHz	Less than 0.13μV
			50MHz to 54MHz	Less than 0.13μV
		AM (at 10dB (S+N)/N)	500kHz to 1.62MHz*	Less than 32μV
			*1.62MHz to 21.5MHz	Less than 2μV
			21.5MHz to 30MHz	Less than 1.3μV
		FM (at 12dB SINAD)	28MHz to 30MHz	Less than 0.25μV
			50MHz to 54MHz	Less than 0.25μV
	Selectivity	SSB, CW, FSK		–6dB : More than 2.2kHz, –60dB : Less than 4.4kHz
		AM		–6dB : More than 5kHz, –50dB : Less than 18kHz
		FM		–6dB : More than 12kHz, –50dB : Less than 25kHz
	Image ratio			More than 70dB
	1st IF rejection			More than 70dB
	Notch filter attenuation			More than 20dB
	RIT variable range	10Hz step		More than ±1.1kHz
		20Hz step		More than ±2.2kHz
	Squelch sensitivity	SSB, CW, FSK, AM	500kHz to 1.62MHz*	Less than 20μV
			*1.62MHz to 30MHz	Less than 2μV
		FM	28MHz to 50MHz	Less than 0.25μV
	Output			1.5W across 8Ω load (10% distortion)
	Output load impedance			8Ω

Notes
1. Circuit and ratings are subject to change without notice due to advancements in technology.
2. Remember to keep the transmit output power within the power limitations of your license.
3. * : The U.S.A. version is 1.705MHz.

KENWOOD CORPORATION
Shionogi Shibuya Building, 17-5, 2-chome Shibuya, Shibuya-ku, Tokyo 150, Japan
KENWOOD U.S.A. CORPORATION
COMMUNICATIONS & TEST EQUIPMENT GROUP
P.O. BOX 22745, 2201 East Dominguez St., Long Beach, CA 90801-5745, U.S.A.
KENWOOD ELECTRONICS DEUTSCHLAND GMBH
Rembrücker Str. 15, 6056 Heusenstamm, Germany
TRIO-KENWOOD U.K. LIMITED
KENWOOD House, Dwight Road, Watford, Herts., WD1 8EB United Kingdom
KENWOOD ELECTRONICS BENELUX N.V.
Mechelsesteenweg 418 B-1930 Zaventem, Belgium
TRIO-KENWOOD FRANCE S.A.
13, Boulevard Ney, 75018 Paris, France
KENWOOD LINEAR S.P.A.
20125, Milano-via Arbe, 50, Italy
KENWOOD ELECTRONICS AUSTRALIA PTY. LTD.
P.O. Box 504, 8 Figtree Drive, Australia Centre, Homebush, N.S.W. 2140, Australia
KENWOOD & LEE ELECTRONICS, LTD.
Wang Kee Building, 5th Floor, 34-37, Connaught Road, Central, Hong Kong
KENWOOD ELECTRONICS CANADA INC.
P.O. BOX 1075, 959 Gana Court, Mississauga, Ontario, Canada L5S 1N9